# Fleet Operator's Handbook

**Issue:05th January 2026 version 11**

## Revision Tracker

| Issue | Amendments | Approved | Date |
|---|---|---|---|
| 05 Sep 2021 | Updated driver responsibility acceptance statement to include Noise Nuisance and entered on Forms register as FN 151. FMP updated to include Noise Nuisance. | B Feltham | 24/09/2021 |
| 06 January 2022 | Policies reviewed- no change | B Feltham | 7th January 2022 |
| 07 January 2023 | Policies reviewed- no change | B Feltham | 12th January 2023 |
| 10 March 2023 | FMP01 Safe Fleet Operator Policy<br><br>Statement added:- *The Managing Director will be supported on a day-to-day basis by the Company Road Risk Champion and Fleet Manager, Paul King.* | B Feltham | 10th March 2023 |
| 03 January 2024 | Policies reviewed- no change | P King | 3rd January 2024 |
| 03 January 2025 | Policies reviewed- no change | P King | 3rd January 2025 |
| 05 January 2026 | Policies reviewed- no change<br>FN151 Drivers Responsibility Statement, Renamed FN151 Annual Drivers Responsibility Statement to reflect requirement to complete annually.<br>FMP 10 Minor change to 3.7 and 4.0 | P King | 5th January 2026 |

## Contents


- Revision Tracker Page 2
- Contents Page 3
- Forwards Page 4
- Introduction Page 5
- FN 151 - Annual Driver's Responsibility Acceptance Statement Page 6
- FMP 01 - Safe Fleet Operator Policy Page 7
- FMP 02 - Driver Eligibility Check Procedure Page 8
- FMP 03 - Resolving Vehicle Faults Procedure Page 13
- FMP 04 - Post Collision Procedure and Analysis Page 16
- FMP 05 - Review of Fleet Legislation and Guidance Page 20
- FMP 06 - Review of Fleet Insurance Page 22
- FMP 07 - Review of Operating Licence Page 24
- FMP 08 - Managing Driver Distraction Policy Page 26
- FMP 09 - Fuel and Tyre Management Policy Page 27
- FMP 10 - Complaints against Drivers Procedure Page 28
- FMP 11 - Driving Standards Policy Page 31
- FMP 12 - Driver Responsibility Policy Page 33
- FMP 13 - Safety of Vulnerable Road Users Policy Page 34
- FMP 14 - Bridge Strike Procedure Page 34
- FMP 15 - Load Security Procedure Page 38
- FMP 16 - Fleet Routing Policy Page 47
- FMP 17 - Managing Infringements Policy Page 48
- FMP 18 - Breakdown and Recovery Procedure Page 49
- FMP 19 – Fleet Manoeuvring Policy Page 51
- FMP 20 - Fleet Objectives Page 52
- FMP 21 - Engine Idling Policy Page 54
- FMP 22 - Prevention of Vehicle Theft Policy Page 55
- FMP 23 - Counter Terrorism Policy Page 53
- FMP 24 - Vehicle Exercise Duty Management Procedure Page 56
- FMP 25 - Security and Counter Terrorism Procedure Page 58
- Fleet Operator Risk Assessment Page 63

## Forwards

"It has become clear that the construction industry has woken up to the hazards it's transport operations present to all road users and especially those classified as vulnerable road users.

For too long now, these risks have been left at the site entrance.

We at McCann's are dedicated to minimising our work related road risk associated with our transport operations and drivers. By signing up to the FORS scheme we are managing our road risks and taking responsibility as a competent fleet operator.

Through your support, the information in this handbook can save lives and prevent accidents, a goal which we all must share"

**John McCann**

**Managing Director**

"It is essential that all drivers of our fleet vehicles ensure their vehicle is road worthy before setting of each day.

Through pre-use checks and effective reporting you will be complying with the law and help us to maintain a safe and efficient fleet.

Through further training we will help you to minimise work related road risk and improve the protection of the vulnerable road users who share our roads.

Together we can make the roads safer for everyone"

**Paul King**

**Fleet Manager**

## Introduction

It is easy to demonstrate that roads and travelling are a dangerous work environment. The Department for Transport reported 181,400 road casualties for the year ending June 2016. Of these 25,893 people were killed or seriously injured on the roads and 155,491 people were slightly injured.

It is clear that the risks involved must be managed and communicated effectively to help keep all our drivers, passengers, vulnerable road users and other road users safe from harm.

This handbook has been written to provide guidance on all of J. McCann & Co Limited's fleet operation policies, procedures and risk assessments to help establish a safe driving workforce.

Through this handbook and by delivering training, we will make all our driver's aware of: their day to day responsibilities, the standard of driving we expect and what to do in an emergency situation.

This manual will improve our fleet performance and through the actions of our drivers make will make this company safer on the road for all road users.

| Owner: Paul King | McCann<br>**Annual Drivers Responsibility Acceptance Statement** | Form: **FN151** |
|---|---|---|
| Personnel Folder | | Revision: C |
| Page: 1 of 1 | | Issued: 21/11/2025 |

1. I have been issued a copy of the latest J McCann Fleet Operator's Handbook and I have familiarised myself with its contents.
2. I will inform J McCann of any changes to my driving licence details.
3. I will inform J McCann of any penalty points, fines or bans that have been issued to me.
4. I will inform J McCann of any changes in my eyesight that effect my ability to drive safely
5. I will inform J McCann of any medicine that I am currently taking that may impair my ability to drive safely.
6. I will **NOT** drive under the influence of Alcohol or Drugs.
7. I will inform J McCann of any events where I have been stopped by the police, VOSA, the DVSA or any other enforcement agency.
8. I will complete and record a daily pre-use vehicle inspection to confirm that the vehicle is safe for me to drive.
9. Whilst driving, I am responsible for the conduct of my passengers and condition of the vehicle.
10. Whilst driving, I am responsible for the security of the load being transported.
11. Whilst driving, I am responsible for the safe speed of the vehicle.
12. Whilst driving, I must not be distracted from driving.
13. Whilst driving, I will use the vision aids provided to identify vulnerable road users.
14. As the driver, I will document my vehicle registration and current mileage when using a company fuel card.
15. As the driver, I will notify J McCann of any vehicle collision I have been involved in.
16. As the driver, I will notify the police within 24 hours of a collision involving a vehicle that has not stopped.
17. As the driver, I will ensure that I do not drive along any route that I have been instructed not to drive along.
18. As the driver, I will ensure that the vehicle is fully locked and secured with the keys removed from the vehicle when it is parked.
19. As the driver, I will ensure that the vehicle's engine does not idle for more than 15 minutes, and will endeavour to switch the engine off 30 seconds after stopping.
20. As the driver I will be vigilant against potential terrorist activities and follow the company's Counter Terrorism policy and procedures to keep myself and the public safe.
21. As the driver, I will act considerately and be mindful of any potential noise nuisance that could be produced.
    I have read and will adhere to the Company 'Management of Noise Policy SMA19'. I have also read the annual Company 'Noise Exposure Assessment' document (CSI018).

**To be signed by the driver to confirm acknowledgment of the above driver requirements**

| Name | Signature | Date |
|---|---|---|
| | | |

# J. McCann & Co Limited

# Safe Fleet Operator Policy

J. McCann & Co Limited consider that nothing is so important that it cannot be done safely, with road safety being as important as health and safety on site.

The health and safety of vulnerable road users, the travelling public, our drivers and our mechanics is fundamental to our success. We believe there is never any conflict between the company's long-term success and our obligation to keep employees and members of the public safe.

J. McCann & Co Limited's policy is to create a culture in which all those affected by our operations remain safe and healthy, and that we maintain and operate our fleet such that we continually reduce our work related road risk.

We will:-

- Manage all our work related road risks
- Continually improve our fleet capability
- Ensure all drivers are healthy, trained and competent to undertake their job safely
- Take greater social responsibility when operating and routing our fleet
- Continually reduce the risk of a collision between large goods vehicles and vulnerable road users such as cyclists and pedestrians
- Consult with drivers and subcontractors to ensure they understand how to keep themselves and others safe

In order to ensure that our objectives are achieved, J. McCann & Co Limited will maintain an externally accredited fleet management system that complies with the requirements of:

- Fleet Operators Recognition Scheme (FORS) Standards
- CLOCS Standard for construction logistics
- Traffic Signs Manual Chapter 8 Part 2: Operations
- Rising the bar 1: Plant and Equipment
- Rising the bar 3: Man/Machine Interface

To ensure a base line level of fleet management competence, we will certify our fleet management systems through annual external accreditation by the Fleet Operators Recognition Scheme (FORS).

The implementation of our fleet management system is a management responsibility and relies upon the competence, cooperation and commitment of all drivers and subcontractors. We will therefore:-

- Actively involve our employees and subcontractors in developing and sustaining a positive driver culture which demonstrates strong leadership and commitment.
- Develop the necessary competencies in our drivers and subcontractors, through the provision of information, training, instruction and supervision as required, to enable them to discharge their responsibilities.
- Establish effective organisational communication, cooperation and control arrangements with documented safe operating procedures and guidance where appropriate.
- Seek Client and driver participation and views on Fleet matters through the use of appropriate consultative mechanisms.

We will also confirm the presence of these arrangements to our supply chain partners.

The Managing Director, who has overall responsibility for this policy, will ensure the provision of adequate resources for its implementation and will regularly assess the continuing improvement of our Fleet's capabilities and reduction of work related road risk.

The Managing Director will be supported on a day-to-day basis by the Company Road Risk Champion and Fleet Manager, Paul King.

This policy will be brought to the attention of all employees and subcontractors working on behalf of the Company and reviewed at least annually.

This policy will be freely available to the public via the Company Internet Site.

John McCann
Managing Director

Date Last Reviewed:
January 2026

# J. McCann & Co Limited

McCann

## Driver Eligibility Check Procedure

## 1. PURPOSE

The purpose of this procedure is to define the processes that must be followed to confirm if an employee, subcontractor or employee's partner is eligible to drive a company owned vehicle.

To qualify as a driver of a company vehicle and drive under the company's insurance, the driver must: submit a valid and current driving licence, complete a driver declaration form, complete a third party driver check form from our insurers and undergo a driver assessment.

Drivers must also follow the specified insurance restrictions issued from our insurers.

## 2. DEFINITIONS

**Minimal Driving Experience** – A driver with less than 3 years driving experience

**Driving Assessment** – New company drivers, or drivers involved in a vehicle collision must undergo a driver assessment with the fleet manager. The driver assessment will be conducted within a suitable vehicle type and involve practical driving along a suitable route. After the driver assessment, the driver will either be assessed as competent to drive on the roads or identify further training before being reassessed. The driver assessment will be recorded on FN058 Driver Assessment Report and will be filed in the employee's personal folder.

**Check Driver Information** – A service provided by the government on the https://www.gov.uk/check-driving-information website to allow employers to check employee's driving licence category entitlements, penalty points or disqualifications. This check can only be completed if the driver has given their permission for their employer to use their personal information to complete this check. It is a criminal offence to obtain someone else's personal information without their permission.

**Daysfleet Mandate**– Daysfleet Driver Licence Check Mandate for provides authorisation to a third party to conduct independent checks against our driver's records.

**Employment Application** – Management form FN042 issued to prospective employees to allow the company to capture vital information regarding prospective employees skills and competencies.

**Driver Licence Declaration** – Management form FN056 issued to new employees to capture their current driving licence record data. Completion of this form grants permission by the employee for the company to complete driver licence checks on their behalf. The fleet administrator will complete driver licence checks on a 6 monthly basis.

## 3. PROCESS DESSCRIPTION

The below sequence must be followed to ensure that J McCann & Co Limited can demonstrate that a new driver and an existing driver is: legally eligible to drive on the road, holds the correct driving licence category entitlement, has been deemed competent to drive on the road by an authorised employee and is fully covered by the company's insurance policy.

1. A prospective employee is issued management form FN042 Employment Application. The completed form is returned and the Directors will decide if an offer of employment is to be made.

2. Once an offer of employment has been decided, the fleet manager or fleet administrator will conduct a driver check using the government website https://www.gov.uk/check-driving-information.
   Where no issues or concerns are raised with regard to their driving competency or history, an offer of employment we be made to the prospective employee.

3. Prior to receiving a company induction the prospective employee will be issued management form FN056 Driver Licence Declaration.

4. The completed FN056 Driver Licence Declaration form and copy of the employee's Driving Licence will be stored in hard copy format in the employee's personal folder and a summary of the information will be documented by the fleet administrator. The summary will be held on a restricted access server to facilitate quick review of driver's capabilities, points and endorsements.

5. The fleet manager will inform the third party checker of the received driver licence declaration and will be issued a Daysfleet Mandate for the employee to complete. On completion the Daysfleet Mandate will be returned to Daysfleet.

6. The office manager will contact the company's insurer and confirm the young driver's details (drivers under 21), all previous disqualification held by driver's and emergent medical conditions which affect the drivers ability to control a vehicle. Any restrictions from the insurers will be confirmed at this stage and communicated to the driver in question.

7. As part of the company induction process, the fleet manager or person authorised by the fleet manager will conduct a Driver Assessment and document the assessment on management form FN058 to ensure that the driver has the correct skills and knowledge to drive the company vehicles safely. The completed FN058 form will be stored as a hard copy in the personal folder. Drivers must present their driving licence at the start of the assessment, if they are not in possession of their licence for the assessment, then the assessment will be cancelled and they will be requested to have their licence on them at all times.

8. Once driver eligibility has been confirmed, and driver consent has been received on FN056, the fleet administrator will conduct a check to confirm that driver's details are current and that there are no disqualifications or points that we have not been made aware.

9. The fleet manager will then pass details of driver checks to an external checker.

10. The frequency of driver checks by external company Daysfleet will be determined by the risk posed by the driver. The frequency of external checks will be based on the driver's current endorsement points and are:

| No of current Endorsement Points | Frequency of External Driving Licence Checks |
|---|---|
| 0-5 points | 6 months |
| 6 – 8 points | 3 months |
| 9 or more points | 1 month |

11. Driver's not disclosing: medical conditions that affect their driving, licence changes, penalty points, disqualifications or endorsements will be brought to the attention of the company directors and appropriate disciplinary action will be taken against the driver.

Foreign Driving Licences

Drivers possessing a driving licence issued by a country within the European Union or the European Economic Area are legally permitted to drive vehicles under 3.5T gvw without reregistering with the DVLA for a UK licence up till the age 70 or 3 years after residency, whichever is longer.

It is our policy to ensure that where this is the case, EU or EEA licence holders register with the DVLA using the D9 form within the first year of employment.

Where drivers holding an EU or EEA driving licence are allocated to vehicles above 3.5T gvw, they must register with the DVLA using the D9 form within the first month of employment.

The company does not recognise the legitimacy of driving licences not issued from within the European Union or European Economic Area and will insist that the employee sits the correct UK driving test.

Spouses and partners

The spouses and partners of our employees are permitted to drive lease cars on the understanding that it is for occasional use only, as long as the following is provided:

- Complete and return a copy of FN056 Driver Licence Declaration Form
- Complete and return a copy of Daysfleet Dricer Check Mandate form
- Provide a current copy of their driving licence
- Comply with the company's insurer's restrictions

The company reserves the right to refuse spouses and partners the privilege of driving company vehicles at any time.

Sub-contractors

Where company vehicles are proposed to be driven by sub-contractors, each sub contractor must:

- Complete and return a copy of FN056 Driver Declaration Form
- Complete and return a copy of Daysfleet Mandate form
- Provide a current copy of their driving licence, CPC card, Digital Tachocard
- Comply with the company's insurer's restrictions
- Demonstrate that they have more than the minimal driving experience

Where sub-contractors driver and operate their own vehicles, the company expects the driver to comply with all legal requirements and FORS requirements.

## 4. MAIN RESPONSIBILITIES

Directors

- Make or reject offers of employment to prospective new drivers.

Fleet Manager

- Conduct driver assessments of new drivers and document of FN058 Driver Assessment Report.
- Authorise competent employees to conduct Driver Assessments on their behalf.
- Manage checks on driver's eligibility to drive company vehicles.
- Receive, document and store new driver information.
- Review Daysfleet driver checks to ensure they are conducting the checks.

Office Administrator

- Issue FN042 Employment Application to prospective employees.
- Issue FN056 Driver Licence Declaration form to new employees.
- Issue the insurers Daysfleet Mandate form to new employees.

Office Manager

- Provide company insurers with new driver details and communicate insurer restrictions to new driver.

New Drivers

- Retain current driving licence on their person at all times when driving for the company.
- Provide company with current and valid copy of driving licence, CPC card and digital tachocard.
- Where changes to health or licence occur, provide the company with a current and valid copy of their driving licence.
- Where foreign licence held by HGV driver, UK driving licence to be applied for before allowed to drive for company.
- Comply with insures restrictions.

Sub contactor Drivers

- Retain current driving licence on their person at all times when driving for the company.
- Provide company with current and valid copy of driving licence, CPC card and digital tachocard.
- Where changes to health or licence occur, provide the company with a current and valid copy of their driving licence.
- Comply with insures restrictions.
- Demonstrate that they are competent commercial drivers by having more than the 3 year minimal driving experience for each vehicle type driven.

Registered spouses and partners

- Provide company with current copy of driving licence.
- Where changes to health or licence occur, provide the company with a current and valid copy of their driving licence.
- Comply with insures restrictions.

# J. McCann & Co Limited

## Resolving Vehicle Faults Procedure

## 1. PURPOSE

The purpose of the this procedure is to establish a protocol to ensure the roadworthiness of our fleet by systematically documenting vehicle faults as they are identified on site, identifying who's responsibility it is to rectify the fault, record what work was completed and that the vehicle is fit to return to the road.

The procedure creates a chain of custody throughout the repair procedure, allowing the fleet manager to monitor and maintain a database of current and ongoing repairs.

Upon completion the vehicle fault card will become part of the vehicles documented history and will be retained in the correct vehicle file.

## 2. DEFINITIONS

All plant and vehicles owned or hired by the company that are designed to be driven or transported upon the carriageway, this includes:

| | |
|---|---|
| Lorry Loading Crane | Cars |
| Grab Wagons | Vans |
| HGV's | Telehandlers |
| Trailers | Dumper Truckers |
| Tipper Lorries | Platforms (MEWPS) |
| Tower Lights | Generators |
| Cable Trailers | Cable Winches |

This document excludes long term lease cars that are issued to individual employees for their sole use. Where faults occur in these vehicles, the lease company must be contacted immediately.

## 3. PROCESS DESSCRIPTION

This procedure aims to ensure that all company owned fleet vehicles and equipment are maintained in a road worthy state, comply with all highway legislation and our transport policy.

At the start of each shift it is the drivers / operators responsibility to ensure that their vehicle is fit to drive on the road. They document the pre-use daily check findings using the correct form below:

**FN064** Site Dumper Daily Pre use Inspection record

**FN065** Tower Lights pre use inspection record

**FN067** Roller daily pre use inspection record

**FN073** Excavator daily pre use inspection record

**FN074** Lorry loader daily pre use inspection record

**FN075** Platform daily pre use inspection record

**FN076** Telehandler daily pre use inspection record

**FN080** Cable Winch pre use inspection record

**FN081** Monkey Tower pre-use inspection record

**FN083** Compressor daily pre use inspection record

**FN084** Plant Trailer daily pre use inspection record

**FN085** Cable trailer daily pre use inspection record

**Vehicle Defect Book**

Where a fault or defect has been identified by the operator, they must document it on their pre-use daily check sheet and informed their supervisor immediately.

The supervisor will contact the fleet manager, who will make a decision if the vehicle is still road worthy with the fault still present or if the vehicle is un-roadworthy and must be isolated from further use until the fault is rectified.

The fault reported and the roadworthy state of the vehicle will be documented on the FN059 Vehicle Fault Card by the fleet manager.

A vehicle will be classed as isolated from further use, when the keys have been removed from the vehicle and placed in a lockable, secure container.

All isolated vehicles must display a sign on the dashboard stating “Not in use”.

Where a vehicle is still road worthy, the fault will be recorded by the fleet manager and the fault card retained until the vehicle comes into the garage for routine maintenance. At this point the fault will be rectified, details of the rectification recorded, and then signed off by the mechanic as suitable to be returned to the road.

Where a vehicle is un-roadworthy, these repairs will be prioritised.

Remote vehicle locations may require third party assistance, in which case pre-approved supply chain will be used to resolve the defect.

Once the fault will be rectified, details of the rectification recorded, and then signed off by the mechanic as suitable to be returned to the road, the Vehicle Fault Card will be returned to the fleet manager who checks and confirms taht the work has been done.

Once satisfied that the rectification has been completed the fleet manager will sign off the final check on the Vehicle Fault Card and release the vehicle.

Isolated vehicles will have their keys returned and “not in use sign” removed.

Completed Vehicle Fault Cards will physically stored in the vehicle files and the fleet administrator will enter the Vehicle Fault Card onto a database for ease of review.

## 4. MAIN RESPONSIBILITIES

Fleet Manager

- Document the initial fault report on a Vehicle Fault Card
- Advising if the vehicle is roadworthy or not with the fault still present
- Issue the Vehicle Fault Card to the appropriate fitter
- signing off the Vehicle Fault

Mechanics

- Rectify the identified vehicle faults on the issued Vehicle Fault Card
- Sign off the work to confirm that the vehicle if fit to return to the road
- Where the mechanic has requested a third party complete the fault repairs, the mechanic must receive confirmation that the work has been completed before signing of the Vehicle Fault Card

Supervisors

- Contact the fleet manager when defects/faults are identified
- Isolating vehicles that are deemed un-roadworthy
- Arranging replacement vehicles for operators or drivers

All Drivers

- Document their pre-use daily check sheets or vehicle defect books
- Report identified defects to their supervisor.

## 1. PURPOSE

The purpose of this procedure is to assist drivers at the scene of a collision and to detail the process for capturing sufficient incident information to allow the fleet manager to: identify root causes, resolve insurance issues, identify contributory factors and where possible implement new controls to prevent reoccurrence of a collision.

Following this procedure will ensure that full and correct information is presented to insurers.

To assist the fleet manager with data collection, analysis and the investigation process, the company will conduct its post collision procedure and analysis in accordance with the **CLOCS Toolkit: Managing collision reporting and analysis**.

## 2. DEFINITIONS

**CLOCS** – Construction Logistics and Cyclist Safety.

**At the Scene Collision Report Form** – A CLOCS form that is to be filled in by the driver as soon as it is safe to do so whilst at the scene of the collision and covers the immediate information that needs to be collected such as contact details of witnesses.

**Driver Post Collision Report Form** – A CLOCS form that must be completed independently by the driver prior to the end of shift at base and within a recommended maximum of 24 hours. It forms part of the driver's account of the collision and should be included in the collision file for the purposes of investigation.

**Manager Post Collision Report Form** – A CLOCS form that the fleet manager should complete within a recommended maximum period of 24 hours of the collision being reported at base by the driver. It forms the company's view of what happened at the scene and immediately prior to the collision. It should be noted that the *Manager Post Collision Report Form* is a summary of the evidence to determine what happened from the point of view of the company. It does not try to determine how or why it happened or who is liable, which takes place in the next stage, the investigation.

**Post Collision Investigation Form** – A CLOCS form that the fleet manager completes during discussions with the driver, it seeks to identify the causes of the collision as well as verify the facts as reported in the driver and manager post collision forms. All the forms of evidence available should be present for the investigation. It is this last form that requires the manager to determine the cause and identify any action to be taken as a result.

**CLOCS Manager** – Is a website and spreadsheet that allows the fleet manager to document incidents and near misses captured using the CLOCS forms, so incident trends can be established. Input into the website allows industry wide trends to be established.

**Bump Pack** – A collection of documents and forms issued to all fleet vehicles that are required to be presented to third parties or used to document information at the scene of a collision.

**Accident Card** – A card issued by our insurers that detail the company name and insurance policy number. These are contained in the Bump Pack and issued by the driver in the event of a collision. The driver must add their name and the vehicle registration number to the card before issuing it to third parties.

Editable copies of the above CLOCS forms are available to download from www.clocs.org.uk/clocs-guides

## 3. PROCESS DESSCRIPTION

***At Scene Collision Reporting Procedure***

When safe to do so, the below sequence must be followed by the driver to ensure that sufficient information is gathered at the scene of a collision:

1. **Stop immediately, when safe to do so – never put yourself in danger**
2. Isolate your vehicle
3. Call emergency services if required
4. If necessary, alert approaching traffic of hazards or dangers
5. Make all parties aware of potential hazards or dangers
6. Do not admit liability for the incident
7. Do not provide a statement to any person other than a police officer
8. Find vehicle "Bump Pack" and open
9. Document the following information on the CLOCS: At Scene Collision Report Form
    a. Record the date and time of the incident
    b. Record the location, weather condition and your direction of travel
    c. Record police involvement i.e. badge numbers, names, incident numbers
10. Take photographs of the following:
    a. Vehicle positions
    b. All damage to vehicles and property
    c. Undamaged sides of all vehicles
    d. Persons involved (with their permission)
    e. Surrounding area i.e. road markings, signs, general road layout
11. Give third parties an Accident Card with your name and vehicle registration added to it.
12. Collect the following third party details on the CLOCS: At Scene Collision Report Form
    a. Driver's detail – Name – Contact Number – Email Address
    b. Other Occupant's details – Name – Contact Number – Email Address
    c. Witness – Name – Contact Number – Email Address
    d. Vehicle - Registration Number – Make – Model – Colour
    e. Insurers – Name – Policy Number – Contact Number
13. Contact site supervisor to inform them of incident
14. Contact Fleet manager Paul King on 07970 848 189 to confirm recovery arrangements

Where practical, the site supervisor or fleet manager will attend the scene of the collision to aid vehicle recovery, data collection, conduct drug and alcohol test on driver and liaise with at scene authorities.

All the above details to be documented on the CLOCS: At Scene Collision Report Form by the driver immediately after the collision.

Where a collision has occurred and the third party has not stop to exchange details, records registration where possible and inform the police within 24 hours of the collision. Failure to do so is breaking the law and the driver may be prosecuted by the police.

To assist the driver in gathering information, all fleet vehicles will be issued with a "bump pack" that will contain the following:

1. Copy of the company's "At Scene Collision Reporting" guidance
2. A copy of the insurer's Accident Card
3. Copy of CLOCS: At Scene Collision Report Form
4. Spare copies of CLOCS third party and witness report sheets

5. Blank paper for sketches or additional notes

***Back At Base Collision Reporting Procedure***

Within 24 hrs of the incident, the driver must return back to base and complete the CLOCS: Driver Post Collision Report Form and the Insurer's Motor Claim Form. Once completed, these forms must be issued to the fleet manager.

As soon as is feasibly possible, the fleet manager or site supervisor will conduct a for-cause drugs and alcohol test on the driver in accordance the company policy SMA2 Drug and Alcohol Policy.

Within 24 hrs of the fleet manager receiving the CLOCS: Driver Post Collision Report Form, the fleet manager will complete the CLOCS: Manager Post Collision Report Form.

After these forms have been completed, the fleet manager will collect supporting evidence and build a Collision report folder that will contain the following information:

1. Completed suite of 4 CLOCS forms
2. Incident Photos and Sketches
3. Insurer's Motor Claim Form
4. Witness Statements
5. Damage report / invoice
6. Drugs and Alcohol test records
7. Driver eyesight check
8. Driver assessment form

This information will be processed by the fleet manager using CLOCS: Post Collision Investigation Form. The fleet manager will use this information to identify the causes of the collision as well as verify the facts as reported in the driver and manager post collision forms. From this investigation, the fleet manager will determine the cause of the collision and identify any action to be taken as a result.

Further information on completing the CLOCS forms can be found in document called CLOCS Toolkit: Managing collision reporting and analysis.

The fleet manager will document all collisions on the CLOCS Manager spreadsheet.

Further information on recording collisions using CLOCS Manager can be found in document called CLOCS Manager Instructions for system use.

Details of collisions will be summarised for issuing in the quarterly HSEQ meeting attended by the company directors and managers.

All collated collision information will be held in a uniquely numbered Collision Record and stored in a secure location on in the Fleet Management System folder on the company server.

Where identified, the company will offer support to drivers still in distress after the collision has been resolved.

After a collision, drivers will not be able to return back to driving until the fleet manager is satisfied that they can drive safely and they have completed and documented a driver assessment on management form FN096 Driver Assessment Report.

Where drivers are identified as being at fault and have breached the approved safe system of work the fleet manager will raise the issue with the Contracts Director who will take the appropriate disciplinary action.

Any driver involved in a disciplinary action has the right to appeal such decisions.

## 4. MAIN RESPONSIBILITIES

Directors

- Review collision data in quarterly HSEQ meetings
- Attend to public relations issues during serious incidents
- Implement disciplinary procedures where drivers are identified as breaching safe systems of work
- Offer and arrange post collision support to drivers still in distress

Garage Manager

- Advise on recovery options after collision

Fleet Manager

- Attend collision scene where practicable
- Where not completed by supervisors, conduct simple drugs and alcohol test on drivers as soon as possible post collision
- Completing CLOCS: Managers Post Collision Report Form within 24 hours of the collision being reported to base
- Gather supporting information
- Issue completed Motor Claim Form for insurers
- Completing CLOCS: Post Collision Investigation Form
- Conduct driver assessments before driver allowed to return to driving
- Monitor trends and establish cause of collision
- Issue Bump Packs to all vehicles

Supervisors

- Attend collision scene where practicable
- Conduct simple drugs and alcohol test on drivers as soon as possible post collision

All Drivers

- Ensure Bump Pack is present in vehicle at all times
- Open bump pack upon a collision and follow at Scene Collision Reporting Procedure
- Complete CLOCS, At the Scene Collision Report Form immediately
- Contact the police within 24 hours where third parties have not stopped to exchange details after a collision
- Complete CLOCS, Driver Post Collision Report Form back at base within 24 hours of collision
- Complete insurers Motor Claim Form
- Review CLOCS, Post Collision Investigation Form with fleet manager
- Right to appeal disciplinary decisions

## 1. PURPOSE

The purpose of this procedure is to assist the fleet manager in ensuring our fleet operations and company vehicles comply with current legislation and scheme guidance.

This procedure will document legislation and scheme guidance documents currently observed within our fleet management system and assist the fleet manager in monitoring and updating changes.

This procedure applies to the fleet management system, our suppliers and contractors.

## 2. DEFINITIONS

**Legal** – Specified legislation, regulations and technical memoranda that are legally binding.

**Other** – Fleet related contract requirements, business codes, voluntary schemes, guidance notes and applicable codes of practice.

## 3. PROCESS DESSCRIPTION

The fleet manager shall identify the relevant legal and other fleet related requirements applicable to the Fleet Management System of the company and determine how their requirements apply

The fleet manager shall ensure that the most up-to-date copies of the legislation and requirements are available to the relevant employees.

Current and up-to-date hard copies of The Highway Code are available at all operating centres, and digital copies of The Highway Code are available from the following website:

https://www.gov.uk/guidance/the-highway-code

The SM shall control the hard copies of documents (e.g. code of practices, technical memoranda, etc.) according to the control procedures in OP14. Directions shall also be provided for the soft copies of the requirements on the relevant websites where they are available on Internet.

The fleet manager shall ensure that the applicable legal and other requirements are considered in establishing, implementing and maintaining all elements of the fleet management system.

The register of legislation and guidance will be reviewed on a 6 monthly basis by the fleet manager. Any changes or issues identified during these reviews will be presented during Management Review for consideration of Top Management.

The register of legislation and guidance can be found at this end of this document

## 4. MAIN RESPONSIBILITIES

Directors

- Review proposed changes to fleet management system identified in Management Review Meetings
- Provide sufficient resources to fully implement a compliant management system

Fleet Manager

- Maintain and update compliance registers
- Ensure registers are reviewed and updated on an annual basis
- Identify significant changes and raise them in the Management Review Meetings

All Drivers

- Comply with revised fleet management system documentation

| Issuing Body | Document Title | Revision | Date |
|---|---|---|---|
| GOV | Road Traffic Act 1998 Chapter 52 | - | 1998 |
| GOV | Road Traffic Act 1991 Chapter 40 | - | 1991 |
| GOV | The Road Vehicles (Authorised Weight) (Amendment) Regulations 2000 | - | 2000 |
| GOV | The Road Vehicles (Construction and Use) (Amendment) (No 4) regulation 2003 | - | 2003 |
| DfT | Code of Practice: Safety of Loads on Vehicles | 3rd Edition | 2002 |
| VOSA | Goods Vehicle Operator Licensing : Guide for Operators | GV74 Rev | Dec 2011 |
| FTA | FTA Compliance Guide: Graduated Fixed Penalties | 5th Edition | Aug 2013 |
| FTA | FTA Compliance Guide: Managing Driver Infringements | 2nd Edition | Aug 2015 |
| FTA | FTA Yearbook of Road Transport Law | 56th Edition | 2018 |
| DVSA | The Highway Code | 2015 Edition | 2015 |
| CLOCS | CLOCS Guide: Managing work related road risks in contracts | Version 1.2 | Feb 2016 |
| CLOCS | CLOCS Standard for construction logistics: Managing work related road risks | Version 1.1 | Aug 2014 |
| CLOCS | CLOCS Toolkit: Managing collision reporting and analysis | Version 1.2 | Feb 2016 |
| FORS | Fleet Operator Recognition Scheme standards | Version 5 | Oct 2018 |
| FORS | FORS Standard Rules and Procedures | Version 5 | Dec 2018 |
| FORS | FORS Standard Terms and Conditions | Version 5 | Dec 2018 |
| HSE | INDG382 Driving at work: Managing work-related road safety | Rev 1 | 04/14 |
| HSE | HSG136 A guide to workplace transport safety | 3rd Edition | 2014 |
| HSE | INDG199 Workplace transport safety: A brief guide | Rev 2 | 05/13 |
| | | | |
| | | | |
| | | | |
| | | | |
| | | | |
| | | | |

# J. McCann & Co Limited

## Review of Fleet Insurance

## 1. PURPOSE

The purpose of this procedure is to ensure that J McCann & Co Limited hold the correct licences and insurances to fully comply with legislation and ensure that all fleet vehicles are covered by insurance.

Fleet operators must ensure that all vehicles being used on the public highway are insured to at least the minimum legal requirement and that all drivers and vehicles comply with our insurer's requirements.

This procedure will be reviewed annually and applies to all our fleet vehicles, our suppliers and sub-contractors.

## 2. DEFINITIONS

**Motor Insurance Database (MID)** – The MID is the central record of all insured vehicles in the UK. It is managed by the MIB and is used by the Police and the Driver and Vehicle Licensing Agency (DVLA) to enforce motor insurance laws.

## 3. PROCESS DESCRIPTION

The below sequence must be followed to ensure that J McCann & Co Limited can demonstrate that all relevant insurance policies are current and reviewed periodically to ensure that they are sufficient to cover the growth of the company:

1 – An insurance pre-renewal letter requesting a formal meeting will be issued to the Office Manager from the insurance brokers in the month of February.

2 – During these meetings with the insurers, the Managing Director and Office Manager discuss offers of non-obligatory insurances and all of the company's insurance policies are renewed.

3 – Once all the parties are content with the new policies, contacts are signed and new policy certificates issued which come into effect in April.

4 – Insurance claims are reviewed every three months by the insurance broker. A schedule of all claims is sent by the Insurance broker to the Office Manager who checks the claims progress and resolution.

5 – Copies of current insurance certificates are held on the Z drive at the following location: Z:\Company Profile\Certificates

6 – The Office Manager enters the company's details in the Motor Insurance Database with guidance from the Fleet Manager, and conducts a 6 monthly review of the details held. Where changes are identified, the Office Manager will notify our insurers by email of the changes and our insurers will amend our fleet inventory accordingly.

## 4. MAIN RESPONSIBILITIES

Managing Director

- Accept or reject offers of new insurance policies and conduct annual policy reviews

Fleet Manager

- Maintain and update fleet inventory and notify the Office Manager of changes to the fleet
- Check fleet insurance certificates are in date
- Assist with reviewing changes to the Motor Insurance Database
- Assist with the quarterly review of the issued claims schedule
- Analyse insurance data and identify trends

Office Manager

- Assist the Managing Director with insurance policy reviews
- Conduct 6 monthly checks on the Motor Insurance Data base, and inform insurers of changes
- Review the quarterly claims schedule issued by insurance broker.

# J. McCann & Co Limited

## Review of Operator Licence

## 1. PURPOSE

The purpose of this procedure is to ensure that J McCann & Co Limited hold the correct details on it's Operator licence to ensure it is fully comply with legislation and ensure that all goods vehicles are covered by the Operator licence.

This procedure will be reviewed annually and applies to all our purchased or hired goods vehicles.

## 2. DEFINITIONS

**Operator Licence** – It is an offence for a company to operate or hire a goods vehicle without a valid operator's licence. A goods vehicle operator's licence is needed to record the maximum number of goods vehicles that can be operated from that location.

**Goods vehicle** – A goods vehicle is classified as any vehicle over 3.5 tonnes gross plated weight or an unladen weight of more than 1525 Kg operated to transport for hire or reward or in connection with a trade or business.

**GV80** – A Department for Transport form to be completed by the fleet manager and submitted to the Traffic Commissioner within 28 days of the purchase or sale of a goods vehicle that formally notifies "non-chargable" amendments to the company's Operator's Licence.

**GV81** – A Department for Transport form to be completed by the fleet manager and submitted the Traffic Commissioner at least none weeks prior to the "chargeable" major change to the company's Operator's Licence.

## 3. PROCESS DESSCRIPTION

When the company operates a new vehicle under the held Operator's Licence, the fleet manager must record the vehicles registration on the Operator's Licence within one month of it coming into the company's possession. Failure to record a goods vehicle's registration on the Operator's Licence will result in the vehicle being illegally operated.

Non-chargeable variations to the Operator's licence include adding and removing vehicle registrations. These variations must be recorded on VOSA's GV80 form and be sent to the Traffic Commissioner at Central Licensing Office.

On an annually basis, the fleet manager will conduct a check on the details held on the Operator's licence to demonstrate that the currently held Operators Licence is valid and suitable to the company's needs.

1 – Check that the following licence information is correct:

- Operator's name
- Type of licence e.g. Standard international licence, Standard national licence and Restricted licence
- Maximum number of goods vehicles registered to operate under the licence
- The number of vehicles and or trailers that have been authorised
- Any conditions attached to the licence
- Any undertakings that are relevant to the granting of the licence
- Expiry date

Amendments to the Operator's licence that are "chargeable" include:

- Increase of vehicle authorisation
- Add a new operating centre to the licence
- Remove an operating centre from the licence
- Change the way in which the operating centre is used

Chargeable variations must be documented by the fleet manager on the Department for Transport form GV81 and sent with the application fee to the Traffic Comissioner at least nine weeks before the extra vehicles arrive or you change the operating centre.

Fleet manager to ensure that current copy of the Operator's licence is displayed in all operating centres.

Additional information regarding the upkeep of the Operator's Licence can be found in VOSA's publication: GV74 Goods Vehicle Operator Licence: Guide for Operators

## 4. MAIN RESPONSIBILITIES

Directors

- To employee a fleet manager of good standing and professional competence

Fleet Manager

- Add and remove goods vehicle registrations onto the Operator's licence using DfT form GV80 within 28 days of owning or selling the vehicle
- Where updates to Operator's licence including changes to: vehicle authorisation limit, operating centres or change operating centre use have been identified, document on DfT form GV81 and issue to the Traffic Commissioner at least nine weeks before proposed change
- Conduct annual checks and update where necessary the information held on the Operator's licence
- Ensure that the current Operator's Licence is displayed in the Operating Centre

# J. McCann & Co Limited

# Managing Driver Distraction Policy

J. McCann & Co Limited consider that nothing is so important that it cannot be done safely, with road safety being as important as health and safety on site.

The health and safety of our drivers, vulnerable road users and the travelling public is fundamental to our success.

We believe there is never any conflict between the company's long-term success and our obligation to keep employees and members of the public safe.

J. McCann & Co Limited recognise that in order for our drivers to drive safely and within the law, they must give 100% of their attention to the road ahead whilst driving.

This cannot be achieved if drivers are distracted by completing other activities whilst driving.

The aim of this policy is to ensure that our drivers are the safest that they can be on the road, so it is of primary importance that they must not distracted whilst driving.

This policy prohibits any driver of a J McCann & Co Limited owned or leased vehicle from:

- Manually activating or operating any in-vehicle technology whilst driving
- Manually activating or operating mobile phones
- Smoking, eating or drinking whilst driving
- Dressing, undressing or grooming whilst driving
- Operating media devices
- Map reading
- Manually wiping the windscreen whilst driving

This policy also prohibits passengers from distracting the driver through inappropriate actions.

To adhere to this policy all drivers must:-

- Pre-set satellite navigation devices with the destination before driving commences
- Place mobile phones in a secure location out of arms reach
- Mobile phones must be put on to silent for the duration of the journey

The company recognises that mobile communications are essential in the modern age and this policy allows drivers to operate or activate in car technology only if the following criteria are met:

- The vehicle must be parked in a safe place
- The vehicles engine must be isolated
- The vehicle handbrake must be engaged

We will also confirm the presence of these arrangements to our supply chain partners.

The Managing Director, who has overall responsibility for this policy, will ensure the provision of adequate resources for its implementation and will regularly assess the continuing improvement of our Fleet's capabilities and reduction of work related road risk.

This policy will be brought to the attention of all employees and subcontractors working on behalf of the Company and reviewed at least annually.

This policy will be freely available to the public via the Company Internet Site.

John McCann
Managing Director

Date Last Reviewed:
January 2026

# J. McCann & Co Limited

# Fuel and Tyre Management Policy

J. McCann & Co Limited recognise that it needs to efficiently manage its fuel and tyre consumption to reduce the impact of our fleet operations on the local and global environment.

Actively seeking to reducing fuel and tyre consumption will produce less carbon and making our fleet more competitive on the road. Creating efficient drivers has the bonus of creating safer drivers as they reduce speeds, plan routes better and reduce erratic driving behaviour.

To ensure that our vehicle are operating efficiently and are driven economically, we will:

- Train and develop our driver's skills so they become more aware of how their driving effect's their vehicles performance and fuel efficiency.
- Issue fuel cards to each vehicle to cut down lost cards and return journeys back to base to collect communal fuel cards.
- Ensure that all drivers accurately record their current vehicle registration and vehicle mileage at the filling station when requested.
- Vehicle refuelling records will be collected through fuel supplier and these will be reviewed at least monthly by the fleet manager (Paul King)
- Using telematics, vehicles will be monitored at least monthly by the fleer manager (Paul King) for unnecessary idling and action taken to reduce idling and improve driver's behaviour.
- Both refuelling records will be reviewed on a quarterly basis by upper management against set transport objectives to establish fleet, vehicle, driver and policy efficiency and identify changes where required.

To ensure that tyre performance is identified and tyre waste is managed in compliance with the waste regulations, we will:

- Record tyre changes during routine maintenance on management form FN086 Tyre Change Record.
- Monitor tyre change data and establish trends in tyre usage.
- Stockpile waste tyres for correct disposal from approved waste carrier.
- Record the removal of all tyre waste collected from Hemlockstone.
- Tyre records will be reviewed on a quarterly basis by upper management against set transport objectives to establish fleet, vehicle, driver and policy efficiency and identify changes where required.

Failure to comply with this policy may result in a breach of environmental law and the relevant enforcement agency taking direct action against the Company.

Where driver actions constitute a breach of this policy, disciplinary warnings will be taken by the Company against the driver.

The Managing Director, who has overall responsibility for this policy, will ensure the provision of adequate resources for its implementation and will regularly assess the continuing improvement of our Fleet's capabilities, performance and reduction of environmental risk.

This policy will be brought to the attention of all employees and subcontractors working on behalf of the Company and reviewed at least annually.

This policy will be freely available to the public via the Company Internet Site.

John McCann
Managing Director

Date Last Reviewed:
January 2026

# J. McCann & Co Limited

## Complaints Against Drivers Procedure

## 1. PURPOSE AND SCOPE

The purpose of this procedure is to define the sequence of actions that must be followed to document and resolve any complaint is raised against a company driver.

As a considerate fleet operator, we must have a fully functioning complaints system which feeds into decision making and shall ensure that any legal and non-legal action against the company is reviewed and reacted to in order to prevent recurrence.

Typical complaints may include, but are not limited to: telephone calls from members of public, observation cards, client audits reports etc.

## 2. DEFINITIONS

**Verbal Complaint** – Complaint received by office reception from member of the public. This is typically members of the public using the contact information on the side of company vehicles to report bad driving or inconsiderate drivers.

**Written Complaint** – Any written documentation detailing a complaint against any driver or driver action taken whilst driving. For internal complaints the preferred method of reporting drivers is using the established observation card system detailed in OHS 05 Observation Card Policy

## 3. PROCESS DESCRIPTION AND OUTPUTS

The following sequence must be followed when any type complaint is received by any employee regarding: driver behaviour, legal compliance, vehicle condition or any other event/incident reported or recorded involving a vehicle from our fleet.

1. External complaint received by employee. Where phone complaints are received by office reception staff, the complaint can be passed directly through to the Fleet Manager or where not present office reception can record the callers: names, nature of complaint and further contact details on an observation card. These should be passed on to the HSEQ Team.

2. Internal complaints raised on observation cards will be received by the HSEQ team and documented on the observation card register.

3. Copies of all observation cards raised against drivers will passed on to the Fleet Manager for investigation and review.

4. The fleet manager will establish the driver of the vehicle and contact them directly to record their version of events.

5. The fleet manager will respond with their investigations findings and document the action taken to resolve the complaint on an observation card.

6. The resolved observation card will be returned to the HSEQ team, who will update the observation card register.

7. Complaint trends recorded on observation cards will be reviewed every three months by Directors and Managers at the HSEQ meetings.

Where disciplinary action is taken against a driver, they have the right to appeal as stated in their contract.

## 4. MAIN RESPONSIBILITIES

Directors

- Review trends in complaints against drivers on a three monthly basis
- Advice action to be taken on persistent offenders

Fleet Manager

- Investigate complaints against drivers within 10 days, document driver response
- Collate complaint data and present it in the quarterly HSEQ meeting
- Identify corrective and preventative action to resolve the complaint

HSEQ Team

- Supply Observation Cards
- Update the complaint on the observation card register
- Update the resolution of the observation card on the register

All employees

- Document complaints on observation cards and submit them to the HSEQ department

# J. McCann & Co Limited

# Driving Standards Policy

J. McCann & Co Limited consider that nothing is so important that it cannot be done safely, with road safety being as important as health and safety on site.

The health and safety of vulnerable road users, the travelling public and our drivers is fundamental to our success. We believe there is never any conflict between the company's long-term success and our obligation to keep employees and members of the public safe by continually reducing our work related road risk.

Drivers have ultimate responsibility of the vehicle when on the road. Through a driver's action or inaction they can directly affect the safety of vulnerable road users, other road users and themselves. To help the driver identify their legal and company responsibilities we will issue fleet management policy FMP 12 Driver Responsibility.

All drivers must be aware of the current Highway Code standards and it is their responsibility to ensure that they read and understand the current requirements. The Company will inform all drivers when the standards have been updated. Drivers can access the Highway Code from the government website: https://www.gov.uk/guidance/the-highway-code

To ensure the safety of vulnerable road users, other road users and our drivers, we have assessed our work related road risk and identified control measure measures to reduce the severity and likelihood of a hazard occurring. This control measures are communicated to all drivers through the issued risk assessments. All drivers must comply with the communicated safe systems of work and risk assessment. Where the driver believes that they have been asked to do something unsafe, they have the right to refuse to work as detailed in the operating procedure OP 29 Refusal to work procedure. No reprisal action will be taken against a driver who refuses to work because they believe in it unsafe to do so. Drivers are also positively encouraged to report and directly resolve any safety failings using the observation card system detailed in OHS 05 Observation Card Policy or report none safety critical issues to our workforce elected safety representatives,

Speed Limits are a legal requirement and are integral to driving safely. To assist drivers with adhering to the roads speed limits we will: assess drivers before they drive for the company, issue a copy of the highway code to all drivers, deliver ongoing training about speed limits, track all vehicles speeds for speeding violations and pre-set vehicle speed limiters. Failure to adhere to the road speed limits will result in enforcement agencies prosecuting the driver of the vehicle.

Vulnerable road users include: pedestrians, cyclists, motorcyclists and are the group of road users most at risk of serious injury and death from our vehicles and their movements on the road. To reduce the likelihood of striking a vulnerable road user we expect all drivers to: follow specified traffic routes, follow and understand our safe systems of work and be familiar with fleet management policy FMP 13 Safety of Vulnerable Users Policy.

When a break down occurs, drivers should ensure that all road users are kept safe and made aware of the hazard of the broken down vehicle and then report the break down to their supervisor and then the garage manager on 07968 421 905 to arrange for recovery. Where breakdowns occur out of hours, then the garage manager can still be contacted on 07968 421 905. Drivers will be briefed and issued a copy of fleet management policy FMP 018 Breakdown and Recovery Procedure.

Driver's must ensure that all vehicle safety equipment is present and defect free as part of their pre-use daily inspection checks. Where safety equipment is damaged or missing it must be reported to the supervisor immediately and the vehicle quarantined from further use until the fault has been rectified. It is the driver's responsibility to ensure that all passengers use the safety equipment provided for passenger protection.

J McCann requires that all driver mobile phones are switched on to silent and placed in a secure location beyond arms reach from the driver. Mobile phones can only be used by the driver if the vehicle has been

parked in a safe place, the engine has been isolated and the vehicle handbrake has been engaged. We advise all supervisors to text instructions to drivers and never repeatedly phone the driver if they know they are driving. All drivers must comply with the company safety management policy SMA27 - Mobile Phone Policy

In-car technology use is distracting to drivers and it is an offence to operate in-car technology whilst driving. It is J McCann's policy that driver's are prohibited from operating any in-car technology whilst driving and are advised to pre-set sat-navs and other technology before embarking on their journey. Further information is contained in fleet management policy FMP 8 Managing driver distraction.

Driver impairment through drink and drugs puts everyone at risk and is unacceptable by any employee. Due to the safety critical nature of our work, J McCann's drugs and alcohol limits are stricter than legal drugs and alcohol limits. We advise that employees never partake of drugs and restrict drinking to Fridays and Saturdays. All employees are briefed and issued a copy company policy SMA 2 Drugs and Alcohol policy. Failure to adhere to this policy will result in dismal.

J McCann does not expect any driver to report to work tired. We ensure that when work is programmed, a maximum duty period of 12 hours is adhered to, this includes travelling time. Where work is located over an hour away, we will review and arrange accommodation away from home. We will monitor and enforce driver's hours to ensure that drivers have at least 45 minutes rest for every 4.5 hours of driving and at least 15 minute break for every 6 hours of work. A period of at least 24 hours must pass before drivers change their shift from day to night or night and day. All employees are briefed and issued a copy company policy SMA 5 Safe Working Hours Policy. Failure of drivers to accurately record their breaks may get directly fined by enforcement agencies and repeated failure will escalate disciplinary action taken by J McCann.

Driver should always park considerately and never block public access routes. When parking the driver must always isolate the vehicles engine, engage the handbrake and remove the keys from the vehicle. When the vehicle is not attended, all doors must be fully locked. This will reduce the likelihood of the vehicle being stolen or accessed by unauthorised personnel.

Drivers must be mindful of noise at all times in residential areas and must not sound off vehicle horns (unless in an emergency) especially during the quiet periods. Driver must also not slam doors, side and tail boards, and must not create noise nuisance through harsh acceleration, over revving of engines or having excessive music volume.

Vehicle emissions are harmful to both people and the environment. The simplest measure to reduce unnecessary emissions is to reduce the time vehicle engines spend idling. Drivers that are not travelling and have not engaged the vehicle's PTO switch must switch off their vehicle's engine were possible. Further information is contained in fleet management policy FMP 21 Engine Idling Policy.

We will confirm the presence of these arrangements to our supply chain partners.

The Managing Director, who has overall responsibility for this policy, will ensure the provision of adequate resources for its implementation and will regularly assess the continuing improvement of our Fleet's capabilities and reduction of work related road risk.

This policy will be brought to the attention of all employees and subcontractors working on behalf of the Company and reviewed at least annually.

This policy will be freely available to the public via the Company Internet Site.

John McCann
Managing Director

Date Last Reviewed:
January 2026

# J. McCann & Co Limited

# Driver Responsibility Policy

J. McCann & Co Limited consider that nothing is so important that it cannot be done safely, with road safety being as important as health and safety on site. Ensuring that our drivers are: fit, trained and competent to operate their vehicle is key to ensuring the safety of vulnerable road users, the travelling public and the driver themselves.

This policy requires the driver must report any of the following to their supervisor and fleet manager:

- Changes to their driving licence details
- Penalty points, fines or bans that have been issued
- Changes in their health that may impair their ability to drive safely
- Changes in their eyesight that may affect their ability to drive safely
- Medicine that they have taken that may impair their ability to drive safely
- Illicit drugs that they have taken
- Alcohol consumption that takes the driver over the limit
- Any events when the driver has been stopped by the Police, VOSA or the DVSA
- Vehicle faults at the pre-start vehicle inspection

Where drivers are feeling unwell or they are taking any medication that may affect their ability to drive, the driver must immediately inform their Supervisor who will decide if the reporting driver is safe to drive or if other arrangements need to be made to safely relieve the driver. The site supervisor may request assistance and guidance from the fleet manager or the HSEQ team with regard to determining if the operative is in a fit state to drive a vehicle.

Whilst driving, this driver has ultimate responsibility for:

- Observing the current Highway Code requirements
- The conduct of their passengers
- Security of loads being transported
- Speed of the vehicle
- The condition and security of the vehicle
- Ensuring the vehicles engine does not idle for more than 15 minutes
- Using vision aids and safety features to protect vulnerable road users
- Notifying the fleet manager of a vehicle collision
- Notifying the police within 24 hours, where a vehicle has not stopped at the scene of a collision

Failure to comply with this policy may result in a breach of the law and the relevant enforcement agency taking direct action against the driver.

Where driver actions constitute a breach of this policy, disciplinary action will be taken by the Company against the driver.

We will confirm the presence of these arrangements to our supply chain partners.

The Managing Director, who has overall responsibility for this policy, will ensure the provision of adequate resources for its implementation and will regularly assess the continuing improvement of our Fleet's capabilities and reduction of work related road risk.

This policy will be brought to the attention of all employees and subcontractors working on behalf of the Company and reviewed at least annually.

This policy will be freely available to the public via the Company Internet Site.

John McCann
Managing Director

Date Last Reviewed:
January 2026

# J. McCann & Co Limited

## Safety of Vulnerable Road Users Policy

J. McCann & Co Limited consider that nothing is so important that it cannot be done safely, with road safety being as important as health and safety on site.

The health and safety of vulnerable road users, the travelling public and our drivers is fundamental to our success. We believe there is never any conflict between the company's long-term success and our obligation to keep employees and members of the public safe by continually reducing our work related road risk..

J. McCann & Co Limited's policy is to ensure that vulnerable road users are kept safe and do not come to harm through our operations.

We will:

- Apply prominent warning signs to all our vehicles over 3.5 tonnes gross vehicle weight to inform vulnerable road users of the dangers associated with close proximity of the vehicle.
- Ensure fitment of side-guards or side under-run protection to both sides of vehicles over 3.5 tonnes gross vehicle weight to prevent entrapment of vulnerable road users when vehicles are turning.
- Ensure fitment of direct and in-direct vision aids to all our vehicles over 3.5 tonnes gross vehicle weight to reduce the risk of close proximity blind-spot collisions.
- Ensure fitment of enhanced audible alarms to all our vehicles over 3.5 tones gross vehicle weight to warn other road users of the vehicles left manoeuvre.
- Ensure that all drivers recognise that the continual use, pre-use daily inspection and maintenance of the fitted vulnerable road user protection measures is an integral part of their job. This will be communicated through: policy briefings, training, toolbox talks, driver daily pre-use inspections, fleet manager inspections and communicated risk assessments.
- Ensure that all drivers undertake continual training to ensure that they have the knowledge, skills and attitude to recognise, manage and reduce the risks that our vehicles pose to venerable road users.
- Reduce both the risk of collision with vulnerable road users and the negative transport effects of construction work on local communities and the environment by developing and implementing a Construction Logistics Plan with our Client and ensuring all our drivers are aware of and understand their obligations under the issued Construction Logistics Plan for their site.
- Ensure that our Clients are aware of the safety features fitted to our vehicles and their site requirements for their safe operations.
- Document, externally report to regulatory third parties and learn from vehicle incidents to ensure that we continually improve our policies and procedures to ensure that they are effective as possible in protecting vulnerable road users.

We will confirm the presence of these arrangements to our supply chain partners.

The Managing Director, who has overall responsibility for this policy, will ensure the provision of adequate resources for its implementation and will regularly assess the continuing improvement of our Fleet's capabilities and reduction of work related road risk.

This policy will be brought to the attention of all employees and subcontractors working on behalf of the Company and reviewed at least annually.

This policy will be freely available to the public via the Company Internet Site.

John McCann
Managing Director

Date Last Reviewed:
January 2026

## 1. PURPOSE

The purpose of this procedure is to assist drivers and supervisors in identifying and managing the hazard of height restricted bridges, preventing bridge strikes from occurring and providing emergency guidance where a bridge strike occurs.

## 2. DEFINITIONS

**Restricted height signs** – Red bordered circular or triangular signs mounted directly on low bridges and in advance of low bridges with a maximum permitted vehicle height below 5.0m (16'6"). The maximum permitted vehicle height is always displayed in feet and inches and may also display the height in meters and centimetres.

**Vehicle height Indictors** – All vehicles or loads over 3m (9'10") must by law have the travelling height clearly displayed in the vehicle cab. It is the driver's responsibility to check that the vehicle height indicator clearly displays the correct travelling height at the start of each shift or when loads are changed.

**Bridge Strike** – A vehicle or load hitting or colliding with a bridge whilst travelling under it. Typically this is HGV's or their loads striking the soffit (under side) of a bridge they are passing under, but also includes any vehicle losing control and crashing into any part of the bridge structure.

## 3. PROCESS DESSCRIPTION

***Before you make your journey***

Check your vehicle height. The law requires that vehicles or loads over 3m high have their height clearly displayed in the vehicle cab, visible from the driver's seat.

Be clear what method is used to measure the height of variable loads

Calculate the correct travelling height of your vehicle with load and equipment in both meters (m) and feet and inches (' and ")

Plan your route to avoid height restricted bridges, if unsure ask your supervisor or fleet manager

***On an approach to a height restricted bridge***

Look out for the bridge restricted height signs. Signs are usually provided in time for you to divert or turn round to avoid the bridge. These signs are provided for your protection, do not ignore them.

Check your vehicle height indicator against the restricted height sign. If your vehicle height is less than the restricted height you may proceed as stated below, if you are over you most stop and turn round and find another route.

Slow down when approaching height restricted bridges.

At arched bridges, keep between the lines marked on the bridge and / or road, which are usually in the centre of the carriageway where the arch is highest.

Wait your turn, then check the road ahead is clear.  A little delay now is better than hours of delay later.

***In the event of a bridge strike***

Check the bridge for a plaque mounted on the wall, where present, call the number on the plaque on the bridge, giving the bridge reference number and the location.

Report the bridge strike to the police by dialling 999

Report the bridge strike to your supervisor and fleet manager

Keep the public away and do not move your vehicle.

Failure to report a collision is a criminal offence.

In the event of a bridge strike, the collision will be investigated by both the fleet manager using FMP04 procedure and the HSEQ manager using SMA7 procedure.

The driver will be suspended from driving duties until root causes have been identified and all corrective actions identified have been completed.

## 4. MAIN RESPONSIBILITIES

Fleet Manager

- Where requested, advise on vehicle routes  and identify height restrictions
- Attend collision scene where practicable
- Investigate bridge strike in accordance with FMP04 procedure
- Conduct driver assessments before driver allowed to return to driving
- Work with HSEQ manager to establish cause of collision and implement corrective actions
- Issue vehicles with signed height restriction atlas

HSEQ Manager

- Attend collision scene where practicable
- Investigate bridge strike in accordance with SMA7 procedure
- Work with fleet manager to establish cause of collision and implement corrective actions

Supervisors

- Report bridge strikes to clients, where they occur on site
- Plan routes in advance and identify height restrictions

All Drivers

- Check load and vehicle height
- Check travelling height is clearly displayed in cab where vehicle above 3.0m in height
- Check that suitable routes have been identified
- Monitor road signs for vehicle height indicators and follow height restriction diversion routes if applicable
- Report bridge strike to rail authorities, police, site supervisor and fleet manager
- Keep public away from bridge strike

## 1. PURPOSE

The purpose of this procedure is to assist drivers in securing their load ready for transport. Failure to comply with this procedure will result in the driver of the vehicle being in breach of the road traffic acts.

The Road Traffic Act 1988 requires vehicle drivers to ensure that vehicles are not overloaded.

The Road Vehicles (Construction and Use) Regulations 1986 require that "All parts and accessories and the weight distribution, packing and adjustment of their loads shall be such that no danger is likely to be caused to any person in or on the vehicle or trailer or on the road"

It is the duty of the driver to check that the load is adequately secured at all times, not just at the start of the journey.

## 2. DEFINITIONS

**High Loads** – All vehicles and loads with an overall travelling height above 3m must have the maximum height of the vehicle displayed in the cab so that it is clearly visible to the seated driver.

**Maximum permitted axle weight –** Is the maximum distributed weight that may be supported by an axle of a road vehicle. Each axle has their maximum permitted weight, which are separately and clearly identified on the vehicle identification plate as "Front Axle, Rear Axle, Axle 1, Axel 2". Exceeding this limit is a traffic offence.

**Gross Vehicle Weight (GVW) –** Also known as "Maximum Authorised Mass" (MAM), GVW is defined as the weight of a vehicle including the maximum load, including passengers and fuel, which can be carried safely by the vehicle when used on the road. Exceeding this limit is a traffic offence. GVW is clearly displayed on the vehicle identification plate and in the owner's manual.

**Gross Train Weight (GTW) –** Not to be confused with GVW, GTW is the maximum permitted weight of the vehicle plus any trailer being towed. Exceeding this limit is a traffic offence. GTW is clearly displayed on the vehicle identification plate and in the owner's manual.

**Unladen Weight –** The unladen weight of any vehicle is the weight of the vehicle when it is not carrying any passengers, goods or other items. It includes the body and all parts normally used with the vehicle when it's on the road. It does not include the weight of the fuel.

## 3. PROCESS DESSCRIPTION

***The principles of load safety***

A load that is not restrained from movement is not secure. Self weight through friction is not enough to stop an unsecured load from moving. Heavier loads are more likely to move when in motion due to their kinetic energy being greater.

Braking increases the forces acting on a load. It requires greater force to stop a load from moving than it does to prevent a load start to move.

The combined strength of the load restraint system must be sufficient to withstand a force not less than the total weight of the load forward, so as to prevent the load moving under severe braking, and half of the load backwards and sideways.

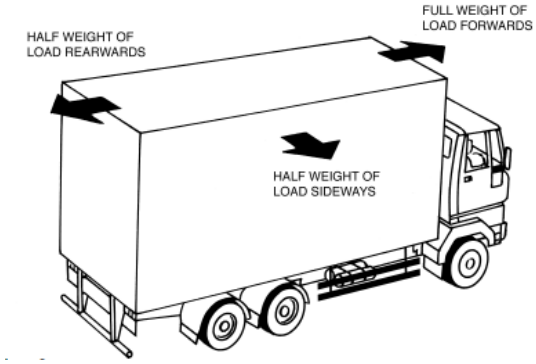


Before a vehicle is loaded, the driver must check the load bed, body work and anchorage points are safe to use and defect free.

It is a legal requirement that the maximum permitted axle and gross weight limits are not exceeded when loaded. These weights can be found on the vehicle plate

When unloading, drivers must be aware that partial unloading may result in individual axel weights becoming overloaded, and the drivers must make a reassessment of the remaining load before recommencing delivery.

Where practicable, loads should be placed in contact with a headboard. Where not practicable additional securing may include; moving the headboard forward, placing blocks or wedges that are secured to the vehicle, additional lashing, straps secured to the van body.

The load must be placed so that it's centre of gravity is kept as low as possible and near to the centre line of the vehicle. This means; spreading loads to evenly distribute loads over the loading area, lighter loads must be placed on heavier loads, heavier loads placed near the centre line and lighter loads placed toward the sides.

When stacking loads, the lower packages must be strong enough to support the stacked loads when the vehicle is braking, cornering or accelerating.

Loads should be placed so they do not obscure the driver's field of vision.

Overhanging or projecting loads must have additional signing and markings and not obscure the licence plate and rear lights.

***Anchorage points, headboards and internal partitions***

Rope hooks must not be used to anchor loads.

Only use rated, metal anchorage points that are firmly attached directly to the chassis or to a metal crosspiece or outrigger. Securing accessories must not be attached to wooden beams. Additional anchorage points must only be attached by the vehicle manufacture as they may weaken the frame of the vehicle.

Headboards must be the width of the vehicle and of sufficient strength to resist the forward movement of the restrained load and of sufficient structure to prevent penetration of loads like metal bars etc. Headboards must be inspected daily to ensure they are defect free, with particular attention to timber panels.

Where possible, loads must not be transported in the same compartment as personnel, where this is not possible the load must be restrained by a bulkhead.

***Load securing equipment***

All equipment used for securing loads must be inspected each time before use to ensure it is defect free.

The total load restraint system will consist of:

- Lashings secured to anchorage point attached to the vehicle chassis, cross bearers or outriggers
- Bulking arrangements including headboards, bulkheads, spigots, transverse beams, shoring bars etc that are securely attached to the vehicle.
- Friction between the load and the vehicle platform

Light loads may be carried without additional restraint, provided that the height of the load is less than the height of the side boards, tailboards or headboard and there is no risk that the load will break through the boards. Loads that exceed the height of any of the boards must be lashed.

Loads must be tightly packed before restraining so to prevent vibration releasing the load from it's restraint.

All items not in use (eg strap end) must be secured from moving.

Cargo doors and locking mechanisms must be secured in the closed position and be in good condition.

***Lashings***

- Includes webbing, chains, cables, clamps and fastening devices, should be in good condition and operatives trained to use them correctly.
- Lashings must be properly tensioned at all times to restrain the load.
- Forward, rear restraint lashings must not exceed an angle greater than 60$^{o}$ to the horizontal as this will weaken the lashing strength.
- There should be a lashing along every 1.5m of the length of the load.
- Lashings must be protected against rubbing and cutting by using corner protectors or protective sleeves.

***Netting***

- Nets and attachments should be in good condition and to BS 6756:1986
- The maximum rated loading of the net must not be exceeded
- Nets must only be tensioned using the device supplied by the manufacturer
- Never over tension the net
- The mesh size should always be smaller than the smallest item that the net retains
- Protect the net against rubbing and cutting using corner protectors

***Boxed loads***

Boxes must be loaded that they are prevented from moving in any direction. They should interlock if possible and be loaded to a uniform height. There must be at least one lashing for each row of boxes across the vehicle and any box which is above the general height of the load must have at least one cross lashing or more depending on weight and size.

***Mixed Loads***

When a load is composed of different items, each part of the load must be secured in a manner suitable to a load of its type. This applies mainly to cross lashings. The longitudinal lashings must be adequate for the total weight of the load, and separators must be used so that no part of the load can move forward independently.

When loading mixed loads of heavy and light items, heavy items should placed on the base and rear with the lighter loads placed on top and towards the front of the vehicle. When loading different sized containers, small items should be central with larger items forming the outer walls of the load. Keep irregular shaped items for the upper part of the load where it is not possible to place them centrally within the load.

***Metal loads***

Small, relatively heavy items (including scrap) that are not palletised or caged, should be securely restrained and carried in sided vehicles. The headboard, sideboards and tailboards must be higher than the load and must be strong enough to withstand the forces generated by the vehicles motion.

Lashings in contact with the metal load must be protected from damage using corner protectors or sleeves.

A large mass can be restrained more efficiently than a number of small items, so where possible collect and aggregate the metal load, be sure to plan the safe loading and removal of such aggregated loads.

Flat metal sheets should be laid largest to smallest, and the lashings must make contact with the top sheet.

Long metal sections must be carried along the length of the vehicle, ensure they are loaded to prevent penetration of the vehicles headboard by forming a unit and preventing a single item moving independently. At least 4 lashings must be placed to prevent movement. Timber pieces can be placed between the lashing and the load to prevent damage. Stanchions or side pins must extend at least the full height of the load to restrain it and be of sufficient strength to hold the load if the lashings fail.

***Loose bulk Loads***

Loose bulk loads such as; sand, soil, gravel, ballast etc must be transported in open bodied vehicles such as Grab Wagons. The load compartment must be kept in good condition to minimise the risk of shedding small quantities of load. All drop sides, tailboards and locking mechanisms must be damage free and clean of debris so that they fit correctly and shut tightly enough to prevent the spillage of any sand, shingle or other loose load being carried. The body sides must completely contain the loose bulk loads and sufficient height must be left to prevent loose materials being blown off during transit. Drivers must be aware that bulk loads can shift during transit on long steep gradients and the loose bulk load may shift so axel weights become overloaded.

***Palletised Loads***

Before loading palletised loads, the pallets must be examined for damage or defect. Where pallets are damaged, loads must be safely replaced on suitable pallets and damaged pallets scrapped in the wood disposal skip. Individual items loaded on the pallet must be secure from movement.

Pallets must be placed so that they are balanced and that the vehicles GVW and axel weights are not exceeded. Pallets and their loads must be adequately constrained by the body, sideboards or head boards, if

not then additional lashing will be required to provide constraint. Pallets will be placed tight against each other. No J McCann vehicle is suitable to travel with pallets stacked on pallets, split loads and repeat journeys to avoid stacking pallets on pallets during transit. Where part of the load is removed, care must be taken that the lateral stability or axel weights are not overloaded.

Pallets should be lashed to prevent movement in any direction. Lashings must not be passed under or wrap round the pallet load banding. Empty pallets must be secured to the vehicle when not in use.

***Machinery, Tools and accessories***

Larger pieces of work machinery or equipment should be placed in contact with a headboard. Smaller items such as tools and accessories must be stored correctly within secure containers, racks, cages or stowed using purposely designed clips or fastenings. Where possible, cargo should be kept separate from passengers.

***Engineering Plant***

This guidance is for the safe carriage of tracked and wheeled engineering plant by vehicles constructed to comply with the Motor Vehicles (Construction and Use) Regulations 1986, thereby permitted unrestricted use of the road.

Engineering plant must always be lashed in accordance with the guidance in the plant's operation and maintenance manual.

High loads may endanger bridges. The driver must ensure that all plant is stowed correctly and with the highest point above the cab measured and documented on the vehicle height indicator.

Wheeled and tracked vehicles must fully rest within the transport deck, then have their engine isolated and parking brake applied. All plant doors and windows must be secured before transit.

The plant must be fully lashed down to the transport deck and plant wheels and tracks should be chocked in both directions to prevent forward or reverse movement with additional lashing as required.

Plant accessories and detachable fittings to be safely stowed and restrained against movement.

Plant hydraulic systems should be relieved twice by moving all the plants control levers through their positions.

Lorry beds must be free from defect and damage, oil and grease.

Plant to be placed to GVW and axel weights are not exceeded.

Generic guidance for the correct transportation of fork lift truck and tracked excavators is detailed below. This safe loading and securing procedure is superseded by the plant specific operation and maintenance manual procedures:

Industrial Fork Lift Trucks (see figure 30a and b)

| Possible hazard | Precaution |
|---|---|
| **1.** Forward movement of machine | **A.** Front and rear wheels of truck butted against chocks fixed to trailer bed. |
| | **B.** Truck lashed to trailer using manufacturers lashing points. |
| **2.** Rearward movement of machine | **A.** As **A.** and **B.** above. |
| | **B.** Forks lowered on to deck and hydraulic pressure relieved by operation of controls twice with engine switched off. |
| | **C.** Lashing from lashing point to anchorage points on trailer side members. |
| **3.** Sideways movement of machine | **A.** Restraint produced by lashings used for forward and rearward restraint. |

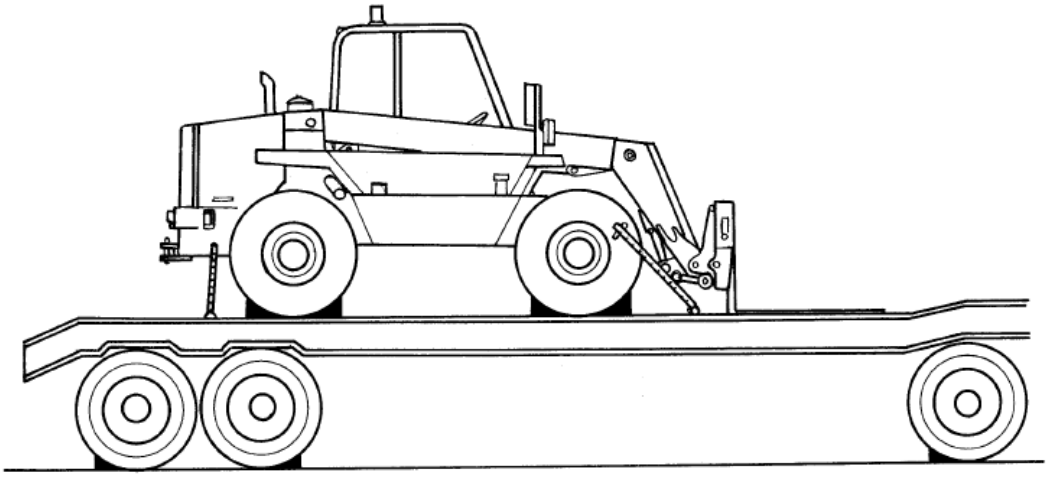

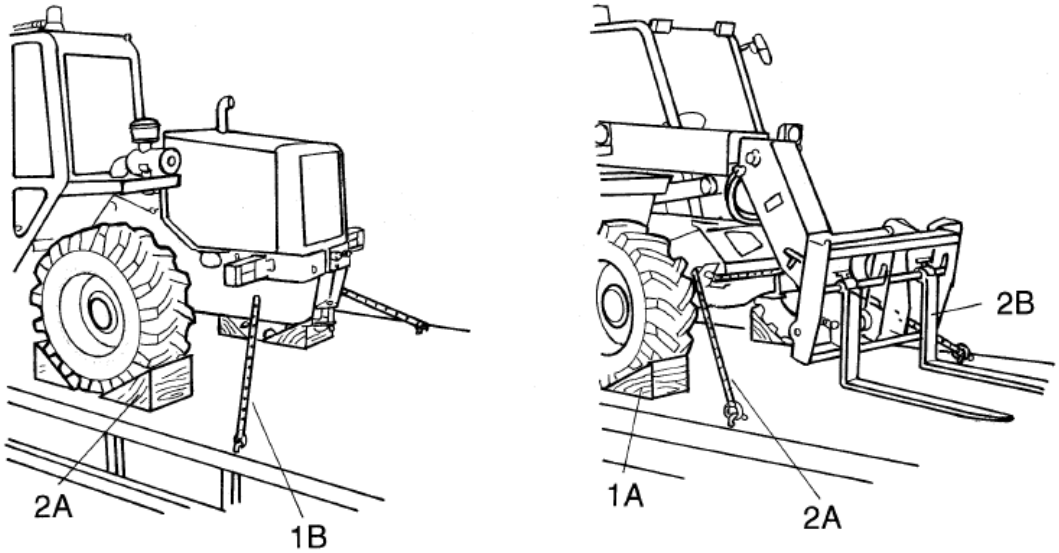


Figure 30b

## Hydraulic Excavator (Tracked and Wheeled) (see figure 34a and 34b)

| Possible hazard | Precaution |
|---|---|
| **1.** Machine striking overhead obstruction | **A.** Stow equipment in position to give lowest overall height. |
| **2.** Movement of cab and superstructure relative to chassis of machine | **A.** Relieve hydraulic pressure by operating all controls twice, with engine switched off. |
| | **B.** Apply slew lock on slewing ring. |
| **3.** Movement of dipper arm away from stowed position | **A.** Lashing securing the bucket to anchorage points on the trailer side members. |
| **4.** Forward movement of machine | **A.** Tracks or wheels butted against the trailer bulkhead where weight distribution allows, or butted against chocks. |
| | **B.** Lashing chains from excavator front towing point or chassis cross member to anchorage points on trailer side members. |
| **5.** Rearward movement of machine | **A.** Tracks or wheels butted against chocks. |
| | **B.** Lashing chains from excavator rear towing point or undercarriage lashing point to anchorage points on trailer side members. |
| **6.** Sideways movement of machine | **A.** Restraint provided by lashing chains used to prevent forward and rearward movement. Do not wedge heavy objects between the bucket and the machine chassis. |
| **7.** Movement of ancillaries | **A.** Lashings over baulkings. |

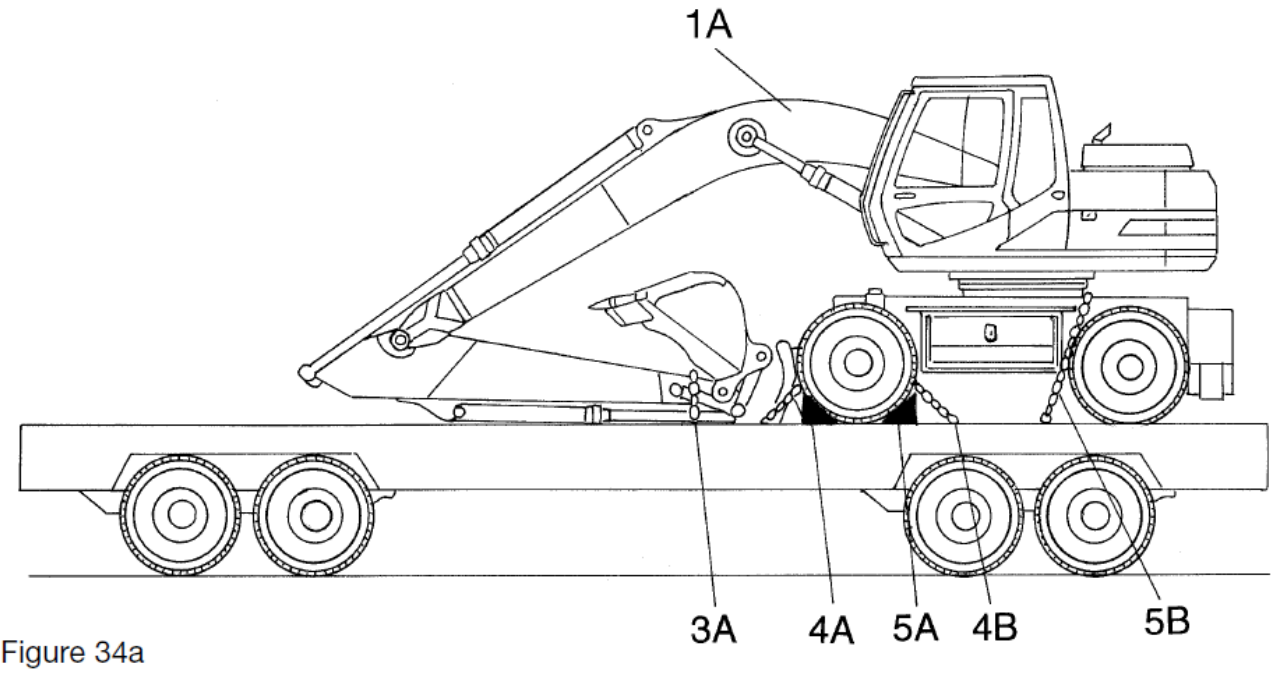


Figure 34a

***Dangerous Goods***

The carriage of dangerous goods such as toxic, corrosive, explosive or flammable materials create additional risks to the driver due to the nature of the loads.

Packages for dangerous goods, such as steel drums, plastic drums, plastic sacks and boxes of various goods are designed and manufactured to ensure that the contents are completely contained under normal transport conditions.

Special precautions have to be taken when dangerous substances are included in a load. Never handle a substance without being issued and briefed on the CoSHH assessment. Special precautions may include the segregation of substances which may interact, careful handling and stowage to reduce the risk of damage to vulnerable containers. The packages should be loaded so their labels are easy to read.

Where in doubt, contact the fleet manager so a specific risk assessment and method statement for the safe transportation of dangerous goods can be identified and briefed.

***Overloading***

Overloading vehicles make them less stable, difficult to steer, increase the risk of tyre failure, take longer to stop, cause excess wear and damage to roads, increase fuel consumptions and void insurance cover as overloaded vehicles are illegal. To avoid overloading the vehicle, the driver must:

1 - Know the weights of your vehicle and load. Where there is risk of loads being exceeded weigh the vehicle at the nearest weighbridge to establish individual axle weights.

2 - Re-distribute your load appropriately after any significant deliveries to avoid overload axels.

3 - Check the GVW before setting out, either using your own weighbridge, or one nearby. You are allowed to drive to teh nearest available weighbridge to check your load and then go to a place where you can be safely offloaded to remove the excess load.

4 - Do not automatically trust declared weights, invoices or delivery notes given by customers. Remember that the driver holds the responsibility for not overloading the vehicle.

5 - Remember that the GVW and GVT include the weight of the vehicle, load, trailer (for GVW), driver, passengers and fuel. Also allow for the weights of any pallets and packaging.

6 - Make sure that the lift / tag axel of vehicle FH57TVZ (McCann No. 174) is used correctly. Not using the axel when the vehicle is loaded means that axels or gross weights could exceed their allowed limits.

7 – Unusual or heavy loads travelling from Hemlockstone Works can be weighed at the following weighbridge:

Wards Recycling,
Giffon Road,
Ilkeston,
DE7 4RF
Tel 045 337 000

8 – To find the nearest public weighbridge from construction sites that you may be travelling from, ask your supervisor to check the following website www.tradingstandards.gov.uk or contact your nearest approved waste station to request the use of their weighbridge.

## 4. MAIN RESPONSIBILITIES

Fleet Manager

- Conduct vehicle audits to ensure that all load securing equipment is present and damage free
- Advise on location of nearest weighbridge
- Develop risk assessments and method statements for the safe carriage of dangerous goods

Supervisor

- Selection of suitable vehicle to transport loads
- Advise on location of nearest weighbridge

Drivers

- Check condition of vehicle before loading
- Check vehicle is not overloaded or unbalanced
- Secure load ready for transit
- Request new lashings when they become damaged
- Monitor load during transit

# J. McCann & Co Limited

# Fleet Routing Policy

J. McCann & Co Limited consider that nothing is so important that it cannot be done safely, with road safety being as important as health and safety on site.

The health and safety of vulnerable road users, the travelling public and our drivers is fundamental to our success. We believe there is never any conflict between the company's long-term success and our obligation to keep employees and members of the public safe.

J. McCann & Co Limited's policy is to reduce the negative transport effects of construction work on local communities and the environment, by working with our client to develop and risk assess a construction logistics plan and minimise potential conflicts with vulnerable road users.

The Construction Logistics Plan will be:-

- Communicated to all our drivers, so they are aware of and understand their obligations under the issued construction logistics plan for their site.
- Monitor restricted route infractions by drivers using vehicle trackers and issue disciplinary warnings as required.

To protect vulnerable road users and the travelling public on route to site, we will:-

- Ensure that delivery drivers are made aware of the Client's risk assessed traffic routes and schedule deliveries to avoid peak hours within the local community.
- Where we are the client, we will distribute maps and other appropriate route information to all companies and drivers accessing our site.
- Ensure that the Client has specified circumstances (if any) under which drivers may deviate the specified routes.
- Where practical leave large vehicles on site to reduce large vehicle movements.

To control site traffic at peak hours, we will:-

- Seek to reduce congestion and collisions in the vicinity of the site by minimising site deliveries, collections and servicing access during peak times.
- We shall document actions taken to reduce congestion and collisions in the schemes Construction Logistics Plan.
- We will ensure that proper planning prevents undue pressure being placed on drivers to meet short time slots through contractual, economic or management pressure when using a delivery booking system.

On site, we will:-

- Ensure that our clients are aware of our vehicle requirements for safe access and egress from site.
- Assist our clients to appropriately manage their site accesses and egresses by ensuring that they are clearly marked, understood and clear of obstacles.
- We will ensure that traffic management reduces and eliminates vehicle related risk by: installing one-way systems, temporary traffic lights, traffic calming measures, additional safety equipment e.g. blind-spot safety mirrors.
- We will ensure that adequately trained and competent marshals are available to assist with safe vehicle manoeuvring.

We will also confirm the presence of these arrangements to our supply chain partners.

The Managing Director, who has overall responsibility for this policy, will ensure the provision of adequate resources for its implementation and will regularly assess the continuing improvement of our Fleet's capabilities and reduction of work related road risk.

This policy will be brought to the attention of all employees and subcontractors working on behalf of the Company and reviewed at least annually.

This policy will be freely available to the public via the Company Internet Site.

John McCann
Managing Director

Date Last Reviewed:
January 2026

# J. McCann & Co Limited

## Managing Infringements Policy

J. McCann & Co Limited consider that nothing is so important that it cannot be done safely, with road safety being as important as health and safety on site.

Driver infringements are evidence of poor performance that may put the driver or J McCann's at risk of not complying with the law or meeting our operator licence undertakings.

Infringements include incidents of: poor time keeping, poor preventative maintenance, telematics identifying speeding, external complaints, observation cards, DVSA issued prohibitions, Graduated fixed penalties, Notices of intended prosecution from the police, parking offences and prosecutions pursued by any enforcement authority.

It is J. McCann & Co Limited's policy to improve the standard and awareness of it's drivers by continually monitoring for driver infringements, engaging with drivers to establish route causes, provide training to drivers to prevent reoccurrence or where persistent infringements are evident, remove these drivers from our fleet.

We will:-

- Provide training to drivers to ensure they are trained and competent to safely drive and use the equipment provided
- Issue tachograph records to the FTA for review
- Identify driver infringements and inform the drivers of the issues
- Have a one to one meeting with the driver to sign acknowledgment of their infringements
- Identify and analyse root causes of the infringement
- Where required we will provide additional training to prevent future infringements
- Retain all documents associated with the infringements for the length of their service with the company
- Document the infringement on our driver concern register, which is review every three months by upper management
- Monitor and review driver performance to ensure the correct driving standards are maintained

Where persistent lesser infringements or more serious infringements occur, then disciplinary procedures will be taken against the driver.

Failure to improve driver performance after a final written warning will result in the driver being dismissed.

Sub-contractors who continually persist with infringements will not be tolerated and the sub contact will be terminated.

We will confirm the presence of these arrangements to our supply chain partners.

The Managing Director, who has overall responsibility for this policy, will ensure the provision of adequate resources for its implementation and will regularly assess the continuing improvement of our Fleet's capabilities and reduction of work related road risk.

This policy will be brought to the attention of all employees and subcontractors working on behalf of the Company and reviewed at least annually.

This policy will be freely available to the public via the Company Internet Site.

John McCann
Managing Director

Date Last Reviewed:
January 2026

# J. McCann & Co Limited

Breakdown Procedure

## 1. PURPOSE

The purpose of this procedure is to provide guidance to drivers in the event of a vehicle break down, that all vulnerable road users, other road users and our employees and kept safe until the vehicle can be recovered or fixed at the roadside.

## 2. DEFINITIONS

**Vehicle Breakdown** – A mechanical failure of the vehicle preventing it from being operated safely and in accordance with the manufactures instructions.

**Garage Manager** – Can be contacted 24 hrs on 07968 421 905

**Fleet Manager** – Can be contacted in normal hours on 07970 848 189

## 3. PROCESS DESSCRIPTION

***Driver Actions***

When a vehicle breakdown occurs, the driver must do the following:

1. Where possible position the vehicle off the road.
2. Warn other road users of the broken down vehicle by using your hazard lights.
3. Motorway hard shoulders are for emergency use only. Only stop in a hard shoulder if it is an emergency and you have no other choice.
4. Pull on to the hard shoulder and stop as far to the left as possible.
5. Position your wheels to the left verge to prevent it rolling into traffic if it is struck by another vehicle.
6. Leave your side lights on and turn your hazard warning lights.
7. Exit the vehicle by the verge side door where possible, ensure all passengers exit in the same manner.
8. All operatives to continue to wear their hi-vis clothing, as a minimum all operatives should wear a long sleeve class 3 hi-visibility vest.
9. The driver and passengers should retreat to a position of safety away from the vehicle, up the verge batter or behind safety barrier is best.
10. Once safe, contact the garage manager 07968 421 905 and arrange for recovery or repair.
11. After the fleet manager, the driver must inform their supervisor.
12. Do not attempt vehicle repairs on your own unless authorised by the fleet manager.

***Out of hours breakdowns***

Where a breakdown occurs out of hours, the driver must contact the garage manager on 07968 421 905. The mechanics will arrange for vehicle recovery to the nearest site compound and will arrange for vehicle repairs to be completed as soon as possible.

***Vehicle Fires***

A suitable sized fire extinguisher is provided in all fleet vehicles. In the event of a small vehicle fire, only attempt to extinguish the fire if you feel you are safe to do so. In the event of a vehicle fire your priority is keeping yourself and others safe. Ensure you retreat to a safe distance and call the emergency services. After contacting the emergency services you must inform the fleet manager and your supervisor.

***Tyre changes***

Drivers or passengers can only change a car or van tyre if you have been trained to do it and the vehicle is located off the road network in a safe location.

Where tyre changes are required on the road network, treat them as any other vehicle breakdown and follow the driver actions above. Do not attempt to change your own tyres whilst broken down on the road network.

Tyre changes for vehicles above 3.5 tonnes require special equipment and must not be attempted by the driver.

***Breakdowns in Emergency Refuge Areas***

When a breakdown occurs on a SMART motorway and the vehicle has been positioned in emergency refuge area, both the driver and the repair or recovery operatives must be aware that to rejoin the SMART motorway they must use the emergency roadside telephones to request assistance so they can leave the emergency refuge area at the correct speed to rejoin the carriageway.

## 4. MAIN RESPONSIBILITIES

Fleet Manager

- Ensure third party repair and recovery companies are on the approved supplier list

Garage Manager

- Contact preferred third party repair and recovery services in the event of a breakdown.
- Be briefed on repair and recovery RAMS when completing operations

Supervisors

- Liaise with drivers when a breakdown occurs

All Drivers

- Try to park the vehicle off road if possible
- Turn off the engine and remove the keys from the vehicle
- Keep passengers and other road users safe
- Contact garage manager and inform them of the breakdown
- Contact supervisor and inform them of the breakdown
- Contact emergency services if required
- Put out vehicle fires if safe to do so
- Use ERT when exiting and ERA

# J. McCann & Co Limited

# Vehicle Manoeuvring Policy

J. McCann & Co Limited consider that nothing is so important that it cannot be done safely, with road safety being as important as health and safety on site.

The health and safety of vulnerable road users, the travelling public and our drivers is fundamental to our success. We believe there is never any conflict between the company's long-term success and our obligation to keep employees, members of the public and the environment safe.

J. McCann & Co Limited's vehicle manoeuvring policy requires all drivers to ensure that the safety of; vulnerable road users, other road users, the driver, their vehicle, the general public and the environment are considered when manoeuvring vehicles at low and high speeds.

Vehicle manoeuvring activities that require Risk Assessments include, but are not limited to:

- Forward motion
- Turing forward
- Reversing
- Coupling and towing
- Parking

We will ensure the safe vehicle manoeuvring by our drivers by:

- Ensuring drivers conduct visual walk round checks round the vehicle to confirm it's free from adjacent hazards and safe for them to manoeuvre.
- When reversing, drivers must reverse under the instruction of a trained banksman.
- Ensuring our drivers receive Toolbox Talk training on safe manoeuvring techniques.
- Drivers to obey the highway code at all times whilst driving.
- Company to install Cameras and other driver aids to aid low speed reversing.
- Drivers to receive targeted training on conducting safe vehicle manoeuvres.
- All drivers to be assessed on their safe manoeuvring during driver assessments.
- Drivers to receive specific risk assessments on vehicle manoeuvring.
- We will use telematics to monitor vehicle manoeuvring and identify where additional training is required.
- Where drivers are identified as deliberately ignoring this policy, disciplinary action will be taken by the company.

We will also confirm the presence of these arrangements to our supply chain partners.

The Managing Director, who has overall responsibility for this policy, will ensure the provision of adequate resources for its implementation and will regularly assess the continuing improvement of our Fleet's capabilities and reduction of work related road risk.

This policy will be brought to the attention of all employees and subcontractors working on behalf of the Company and reviewed at least annually.

This policy will be freely available to the public via the Company Internet Site.

John McCann
Managing Director

Date Last Reviewed:
January 2026

The Top Management of J McCann & Co Limited consider that nothing is so important that it cannot be done safely, with road safety being as important as health and safety on site. The health and safety of vulnerable road users, the travelling public, our drivers and our mechanics is fundamental to our success.

To demonstrate our commitment to continually improving fleet safety we have set the following objectives that are to be reviewed at each quarterly safety meeting. All objectives will be annually reassessed with new objectives set to an enable the company to raise the bar on all safety issues:

| Objective | Target | Responsibility |
|---|---|---|
| Improve the company management of work related road risk | Maintain FORS bronze and silver accreditation | Fleet Manager |
| | Achieve FORS gold accreditation | Fleet Manager |
| | Deliver vulnerable road user awareness training to all our HGV drivers | Fleet Manager / Commercial Director |
| Reduce collisions and the fleet's environmental impact through better management, training and technology | Monitor and improve overall fleet efficiency (Km/L) through better driver training | Fleet Manager |
| | Achieve a 10% reduction in own and third party insurance costs by reducing the number of collisions | Fleet Manager |
| | Achieve a 10% reduction in penalty charge notices accumulated by fleet drivers | Fleet Manager |
| | Achieve a 10% reduction in unnecessary engine idling times | Fleet Manager |
| | Achieve a 5% reduction in harmful emissions produced by our fleet activities | Fleet Manager |
| Protect vulnerable road users | Maintain 0 collisions with vulnerable road users | ALL |

# J. McCann & Co Limited

# Engine Idling Policy

J. McCann & Co Limited consider that nothing is so important that it cannot be done safely, with road safety being as important as health and safety on site.

The health and safety of vulnerable road users, the travelling public and our drivers is fundamental to our success. We believe there is never any conflict between the company's long-term success and our obligation to keep employees, members of the public and the environment safe.

J. McCann & Co Limited's policy requires driver to switch off their engine 30 seconds after they stop travelling, this will reduce the instances of unnecessary engine-idling whilst loading, waiting or in stationary traffic. Reduction of unnecessary engine-idling will reduce the impact of our emissions on public health and the environment. It will also lead to increased fuel and engine efficiency for these vehicles.

We define unnecessary engine idling as an event where the engine is switched on for more than 15 minutes without producing productive work.

Occurrences of engine idling include but are not limited to:

- Loading and offloading of plant and materials by other items of plant.
- Whilst on site, operatives waiting for work instructions.
- Vehicles stationary within standing traffic.
- Static vehicles in work areas that require beacons to remain flashing.

We will reduce the occurrence of unnecessary engine idling by:

- Communicating the benefits of reducing engine idling and highlighting the dangers associated with unnecessary engine idling to all our drivers and subcontractors.
- Ensuring our drivers receive Toolbox Talk training on the need to reduce engine idling times.
- Ensure our drivers receive approved driver training on the techniques to reduce engine idling times.
- Researching and procuring new fleet vehicles with anti-idling technologies and more efficient engines.
- Changing old hazard beacons to the new LED type so the engine is not required to be on when static.
- Trial the use of telematics to ensure we identify a robust real-time reporting system that is right for the business.
- Use telematics to monitor occurrences of unnecessary engine idling and use this data to target specific drivers with additional training and knowledge to prevent reoccurrence.
- Where traffic routes are identified as the cause of unnecessary idling, we will reroute vehicles in line with our other fleet polices or ensure engines are switched off when not working.
- Where drivers are identified as deliberately ignoring this policy, disciplinary action will be taken by the company.

Vehicles fitted with PTO switches are exempt from the above as they require the engine to idle to activate fitted plant equipment.

We will also confirm the presence of these arrangements to our supply chain partners.

The Managing Director, who has overall responsibility for this policy, will ensure the provision of adequate resources for its implementation and will regularly assess the continuing improvement of our Fleet's capabilities and reduction of work related road risk.

This policy will be brought to the attention of all employees and subcontractors working on behalf of the Company and reviewed at least annually.

This policy will be freely available to the public via the Company Internet Site.

John McCann
Managing Director

Date Last Reviewed:
January 2026

# J. McCann & Co Limited

# Prevention of Vehicle Theft Policy

J. McCann & Co Limited consider that nothing is so important that it cannot be done safely, with road safety being as important as health and safety on site.

The health and safety of vulnerable road users, the travelling public and our drivers is fundamental to our success. We believe there is never any conflict between the company's long-term success and our obligation to keep employees, members of the public and the environment safe.

J. McCann & Co Limited's prevention of vehicle theft policy requires all drivers to ensure that they take simple, practical steps to stop vehicle theft and prevent unauthorised access of their vehicle. Preventing vehicle theft and unauthorised access reduces property damages and ensure that our vehicles are not used to endanger others.

We will prevent vehicle theft and unauthorised access by ensuring:

- Our drivers park considerately.
- All doors are locked and windows closed when the vehicle is parked or not attended.
- No personal valuables are left on display within the vehicle.
- No tools or equipment of value is left in the vehicle when not parked in a secure compound.
- That handbrakes are engaged, engine switched off with the keys removed from the vehicle when parked or not attended.
- Unused vehicles on site have their keys stored in a lockable strong box.
- When at home, vehicle keys to be stored out of sight and away from doors and windows.
- Vehicles to be fitted with immobilisation and anti theft devices.
- Vehicles to be fitted with trackers
- Where drivers are identified as deliberately ignoring this policy, disciplinary action will be taken by the company.

We will also confirm the presence of these arrangements to our supply chain partners.

The Managing Director, who has overall responsibility for this policy, will ensure the provision of adequate resources for its implementation and will regularly assess the continuing improvement of our Fleet's capabilities and reduction of work related road risk.

This policy will be brought to the attention of all employees and subcontractors working on behalf of the Company and reviewed at least annually.

This policy will be freely available to the public via the Company Internet Site.

John McCann
Managing Director

Date Last Reviewed:
January 2026

# J. McCann & Co Limited

# Counter Terrorism Policy

J. McCann & Co Limited have a Corporate and Social responsibility to our employees and general public to ensure that we take steps to minimise the risk of our fleet being used in potential acts of terror.

Within recent years, there have been multiple reported incidents across the UK of drivers being attacked and their vehicles being stolen and driven with the intent to be used in terrorist acts.

It is critical that J. McCann & Co Limited take steps to ensure that it's drivers recognise and report potential security and terrorism threats to the authorities and take practical steps to keep themselves and the general public safe.

J. McCann & Co Limited's Counter Terrorism policy requires all drivers to ensure that they take simple, practical steps to counter potential terrorist acts.

We will assist in countering acts of terrorism by ensuring:

- Fleet manager is appointed as Counter Terrorism Champion
- Our counter terrorism procedure is communicated to all drivers
- Drivers to complete FORS Security and Counterterrorism eLearning module
- High levels of vehicle security are maintained and regularly checked
- High risk loads are identified to drivers
- Vehicles are not left unattended in high risk locations
- Defensive parking is used
- Suspicious behaviours and acts are immediately reported to the correct authorities

The Counter Terrorism contact no. is 0800 789321

The Managing Director, who has overall responsibility for this policy, they will ensure the provision of adequate resources for its implementation and will regularly assess the fleet's and driver's performance against this policy.

This policy will be brought to the attention of all employees and subcontractors working on behalf of the Company and reviewed at least annually.

We will also confirm the presence of these arrangements to our supply chain partners.

This policy will be freely available to the public via the Company Internet Site.

John McCann
Managing Director

Date Last Reviewed:
January 2026

# J. McCann & Co Limited

McCann

## Vehicle Exercise Duty Management Procedure

## 1. PURPOSE

The purpose of this procedure is to provide guidance to taxation of vehicles owned by J McCann in accordance to DVLA Guidelines.

Failure to ensure that the correct vehicle exercise duty has been paid could result in the driver being automatically fined £80 by the DVLA (Driver & Vehicle Licensing Agency). There is also a fine against the company for not having an adequately insured vehicle if it isn't covered by a SORN.

## 2. DEFINITIONS

**Vehicle Taxation** – Also known as: Vehicle Excise Duty (VED),"vehicle tax", "car tax" or "road tax", and formerly as a "tax disc", is an annual tax that is levied as an excise duty and which must be paid for most types of vehicles which are to be used (or parked) on public roads in the United Kingdom.

**SORN** - Statutory Off Road Notification (SORN) official notification that the vehicle has been declared as "off the road". No vehicle tax is paid for SORNED vehicles.

**V11** - Vehicle tax reminder letter automatically issued by the DVLA to the registered vehicle owner.

## 3. PROCESS DESSCRIPTION

To ensure that all vehicles within the J McCann fleet are correctly taxed the following process will be followed.

The fleet manager will use the vehicle data base in which we input all the appropriate legal requirements – MOT, VED, tacho calibration (if required) etc:

1. The first week of each month, the fleet manager will generate a report of what vehicles who's tax expires at the end of that month

2. Upon arrival of the V11 documents from DVLA. The fleet manager will Cross reference the letters with the report generated previously to ensure that the company has received all the correct documentation and that no vehicle tax is are missing.

3. Once the fleet manager has confirmed that vehicle tax needs to be applied for that vehicle, the fleet manager will log on DVLA website, https://www.gov.uk/vehicle-tax

4. The fleet manager will complete the online application and pay the VED for each vehicle

5. The fleet manager will update the vehicle database to record the payment of VED, VED expiry date and file the associated V11 with the vehicle documents.

6. Any vehicles not being Taxed MUST Sorned and a copy put in the vehicle file

7. SORNED vehicles are kept at Hemockstone Works until sold or repaired, Garage Manager to confirm change of status with Fleet Manager so change of status can be updated on the register.

## 4. MAIN RESPONSIBILITIES

Fleet Manager

- Maintain vehicle database and enter planned VED expiry dates
- Monthly review of vehicle database for planned VED dates
- Check received V11 letters to ensure all VEDs captured
- Make VED payments on line
- Apply for SORN notice for vehicles taken off road
- Keep vehicle register up to date

Garage Manager

- Ensure all vehicles have the appropriate MOT
- Any vehicles being sold or SORN'ed to be reported to the fleet manager
- Removing FORS stickers from sold vehicles

## 1. PURPOSE

The purpose of this procedure is to assist drivers and supervisors in identifying potential security issues associated with fleet activities and ensuring that they recognise and report potential security and terrorism threats. As part of the wider safe systems of work the Company aims to minmise the impact of the terrorist threats on the community, the company's employees and it's activities.

The scope of this policy does not cover acts of Cyber Terrororism or Eco-terrorism.

Examples of recent terrorism acts involving vehicles include:

- Deliberate vehicle-ramming into crowd of people is a tactic used by terrorists becoming a major terrorist tactic in the 2010s as it requires little skill to perpetrate and has the potential to cause significant casualties;
- Deliberate vehicle-ramming has been carried out in the course of other types of crimes, including road rage incidents;
- Deliberate vehicle-ramming incidents have been caused due to a driver's psychiatric disorder;
- Vehicles have been used by attackers to breach buildings with locked gates, before detonating explosives;
- Vehicles have also been used in 'follow-up' attacks;
- Attacks have been carried out by different groups, motivated by different extremist motivation.

## 2. DEFINITIONS

**Terrorism** – The systematic use of violence by a person or organisation to create a general climate of fear in a population and thereby to bring abut a particular political objective.

**Counter Terrorism Champion**– Company employee appointed by J McCann with the responsibility to assess terrorism threats to the company and identify and implement suitable control measures to prevent employees, plant, equipment and fleet becoming targets for terrorist activities.

**Suspicious behaviour -** Suspicious activity is any observed behaviour that could indicate terrorism or terrorism-related crime. This includes, but is not limited to: Being asked to divert to a different location, Un authorised people accessing vehicles and loads, theft of petrol or high risk loads, unload directly into another vehicle, A parked vehicle an odd location, a package/load left unattended, a window/door is open that is usually closed, or other out-of-the-ordinary situations occur.

**Vehicle-borne improvised explosive devices -** Vehicle-Borne Improvised Explosive Device (VBIED) is an improvised explosive device placed inside a car or other vehicle and then detonated. It is commonly used as a weapon of assassination, terrorism or guerrilla warfare, to kill the occupants of the vehicle, people near the blast site, or to damage buildings or other property.

**Bomb threat** – A threat made either: face to face, via a telephone message or alternative media platform that inform the person removing the threat that an explosive device has placed and will cause loss of life, property damage or service disruption. Bomb threats must be reported to the police immediately on 999.

**Suspect device –** A package or item of language that is suspected to contact an explosive device. Suspect devices should be reported to the police immediately on 999.

**Run-Hide-Tell –** A simple technique used to keep people safe in the event of a terrorist attack. Employee's are advised to:

**RUN –** run to a place of safety. Never expose yourself to harm from terrorists

**HIDE –** Hiding is better than confronting terrorists. Remember to turn your phone to silent and turn off vibrate. Barricade yourself in if you can.

**TELL -** When safe to do so, contact the police by calling 999.

## 3. PROCESS DESSCRIPTION

### 3.1 Vehicle security

Vehicles have been used in terrorist attacks as weapons or have been stolen and used for transport, these simple steps will help to prevent Company vehicles being stolen and used without authorisation:

- Keep vehicle doors locked
- Always check locks, ensure they are maintained and working correctly
- Keep Valuables out of sight
- Never leave keys in the vehicle
- Attempts thefts and vehicle break-ins should be reported to the Non-emergency crime to the police – 101

### 3.2 Parking Locations / Rest Breaks

Vehicles and drivers can place them selves at risk when parked in none-secure locations during their designated rest breaks. All drivers must observe the following:

- For breaks, use lorry parks that are well lit, have CCTV coverage and are used frequently by other drives
- Vehicles and their loads left in nonsecure areas must be inspected for stowaways or tampering before transit, search areas include paniers and storage lockers
- Keep fuel safe by keeping fuel caps locked and park to prevent access to fuel cap
- Hi-jack hotspot sign
- Drivers to employee Defensive parking techniques, e.g. in exposed areas park so fuel cap exposed to public view

### 3.3 Deception Theft

Drivers may experience being intercepted by criminals and terrorist gangs with the intent to deceive the driver and steal the cargo or the vehicle. All drivers must observe the following:

- Spot Bogus officials, request to see credentials
- Drivers should be on the lookout for suspicious activity like, vehicles parked in unlikely places, CCTV cameras disconnected or street lamps out
- Driver must never unload directly into another vehicle
- Always check change to delivery / unloading area with supervisor
- Never follow phone instructions from unknown callers

### 3.4 Driver Security

To protect drivers from being at risk of terrorist activity, all drivers must

- Have sufficient phone signal coverage
- Drivers are not allowed to give lifts or passage to none authorised persons
- No stop policy – if you don’t feel safe, move to a safe location and inform supervisor
- Keep mobile phone charged up

- Keep keys to company vehicles away from doors and windows and keep secure
- Only stop for marked police/DVSA vehicles with uniformed occupants. If in doubt, ask for identification
- Any employee put at risk should follow the RUN – HIDE – TELL procedure.

### 3.5 Reporting issues

All drivers should report concerns to the following organisations:

- Immediately report theft of high risk items like fuel and Bleach to the police
- Report emergency terrorism threat to the police - 999
- Report None-emergency terrorism threat to the Anti-terrorist hotline – 0800 789321
- Report Non-emergency crime to the police – 101
- Report Non-emergency HGV crime to the NaVCIS Freight Crime Desk – 02380 478 311

### 3.6 Counter Terrorism Champion

Appointing a Counter Terrorism Champion to ensure that:

- Counter Terrorism procedures are aligned to the procedures for protecting against other security threats, such as theft and crime;
- Different forms of threat that exist in terms of vehicle security and terrorism are recognised;
- Develop and implement security improvements and contingency plans as required;
- Review compliance to Security measures once impelmented;
- Ensure that staff are aware of the  training required;
- Ensure safe and sensitive management of security incidents;
- Manage the reporting procedure to the relevant authorities.

The Counter Terrorism Champion shall be identified in the organisation chart IMA1.

### 3.7 Vehicle-borne improvised explosive devices

Vehicles have been modified by terrorists to be used as explosive devices against public areas and security buildings.  To reduce the likelihood of a Company vehicle being used as a VBIED the driver should complete the following checks:

- Drivers should be briefed that they are carrying high risks loads
- Where carrying high risk loads, drivers to be vigilante for signs of tampering with the vehicle
- Where suspicious signs are found, then report them immediately to the None-emergency terrorism threat to the Anti-terrorist hotline – 0800 789321

### 3.8 Bomb threat

If any driver or employee receives a bomb threat they should do the following:

- Stay calm and listen to the threat carefully
- Have immediate access to a checklist on key information that should be recorded
- If practical, keep the caller talking and alert a colleague to dial 999
- If displayed on your phone, note the number of the caller, otherwise, dial 1471 to obtain the number once the call has ended
- If the threat is a recorded message write down as much detail as possible

- If the threat is received via text message do not reply to, forward or delete the message. Note the number of the sender and follow police advice
- Know who to contact in your organisation upon receipt of the threat, e.g. building security/senior manager. They will need to make an assessment of the threat

If the threat is delivered face-to-face*:*

- try to remember as many distinguishing characteristics of the threat-maker as possible

Once the police have been informed, immediately inform you site supervisor and J McCann Counter Terrorism champion.

### 3.9 Suspect devices

Under no circumstances should any suspicious item be touched or moved in any way.

Immediately start evacuation of the area and dial 999

## 4. MAIN RESPONSIBILITIES

Senior Management

- Amend, monitor and review Business continuity plan
- Appoint Counter Terrorism Champion
- Maintain organisation chart IMA-01

Fleet Manager/ Counter Terrorism Champion

- Appointed as Counter Terrorism Champion to ensure that:
  - Counter Terrorism procedures are aligned to the procedures for protecting against other security threats, such as theft and crime;
  - Different forms of threat that exist in terms of vehicle security and terrorism are recognised;
  - Develop and implement security improvements and contingency plans as required;
  - Review compliance of security measures once impelmented;
  - Ensure that staff are aware of any counterterrorism training required;
  - Ensure safe and sensitive management of security incidents;
  - Manage the reporting procedure to the relevant authorities.
- The procedures for countering terrorism shall be supported by risk assessments or method statements and include instructions to drivers on:
  - Identifying suspicious behaviour or activity;
  - Dealing with vehicle-borne improvised explosive devices;
  - Dealing with bomb threats and suspect devices.

Supervisors

- They are conversant with all procedures and documentation referred to in this policy and that the policy is fully implemented;

All Drivers / Employees

- Be vigilante during vehicle checks for tampering and stowaways
- Only park in safe and secure locations
- Request and verify credentials of persons requesting them to stop

- If in doubt, check and confirm details with site supervisors
- They are trained to adhere to strict security measures to prevent hijacking;
- They continue to monitor their vehicle all throughout the day and report any suspicious activity;
- If they suspect that the vehicle is being targeted then they must follow the instruction to 'RUN, HIDE, TELL'.
- Report Bomb threats to the police and employees
- Report emergency terrorism threat to the police - 999
- Report None-emergency terrorism threat to the Anti-terrorist hotline – 0800 789321
- Report Non-emergency crime to the police – 101
- Report Non-emergency HGV crime to the NaVCIS Freight Crime Desk – 02380 478 311

# Fleet Operator Risk Assessments

| Hazards | Persons in Danger | Risk Rating | | | Control measures | Risk Rating | | |
|---|---|---|---|---|---|---|---|---|
| | | S | L | R | | S | L | R |
| Striking Vulnerable Road Users (VRUs) – General Driving | VRUs<br>Driver<br>Other Road Users | 3 | 3 | H | Driver's to receive Vulnerable Road User awareness training<br>Drivers to be vigilant at all times, especially in urban areas<br>Where possible, vehicle routes to be scheduled away from identified areas of vulnerable road users<br>HGV's to be fitted with the following protection measures:<br>Prominent warning signage to VRUs<br>Side under-run protection to all vehicles over 3.5T<br>Class VI mirrors to all vehicles<br>Close Proximity warning sensors<br>Fresnel Lens (to eliminate blind spots)<br>Drivers must check that VRU protection measures are present and defect free at start of shift<br>Drivers must check blind spots before completing maneuver | 3 | 1 | L |
| Lone working – General Driving | VRUs<br>Driver<br>Other Road Users | 2 | 3 | M | Where possible, driver to not drive alone<br>Where unavoidable, lone drivers to be issued personal SOS alarm.<br>Operatives to inform line managers when they are expecting to work out of standard hours<br>Ensure staff have emergency contact numbers and the means to make contact in case of emergency.<br>Fleet vehicles have tracking system to confirm location<br>When parking, engage hand brake, isolate engine, remove keys and lock doors to prevent vehicle theft. | 2 | 1 | L |
| Poor Driver Health and Fitness– General Driving | VRUs<br>Driver<br>Other Road Users | 2 | 2 | M | Driver eyesight check completed at induction and every 3 months<br>Drivers complete company "safety critical" health and safety medical at specified periods<br>HGV drivers to complete HGV medical checks upon application for licence and every 5 yrs after the age of 45. Copy to be given to employer<br>Drivers to inform company of any medicine they are taking that may affect their ability to drive safely<br>Drivers to inform company of any changes to their health that may affect their ability to drive safely<br>Drivers to sign driving licence declaration and complete medical questionnaire at company induction | 2 | 1 | L |
| Driver position leading to Musculoskeletal disorders – General Driving | Driver | 1 | 3 | L | Drivers complete company "safety critical" health and safety medical at specified periods<br>HGV drivers to complete HGV medical checks upon application for licence and every 5 yrs after the age of 45. Copy to be given to employer<br>Drivers trained in manual handling techniques<br>Driver informed to adjust seat, headrest and mirrors to minimize risk of pain<br>Driver must have regular comfort breaks<br>Driver to always use fitted seat belts | 1 | 1 | L |
| Driver competence – | VRUs | 1 | 2 | M | Drivers to hold current driving licence with suitable categories | 1 | 1 | L |

# Fleet Operator Risk Assessments

| Hazards | Persons in Danger | Risk Rating | | | Control measures | Risk Rating | | |
|---|---|---|---|---|---|---|---|---|
| | | S | L | R | | S | L | R |
| General Driving | Driver<br>Other Road Users | | | | Drivers of vehicles above 3.5T to have 5 days CPC training every 5 years<br>New employees to the company to receive driver assessment and identify further training before being allowed to drive company vehicles<br>After collision, driver only allowed to return to road after successful driver assessment<br>Continual driver training delivered to improve drivers abilities<br>Periodic monthly checks conducted on driving licence to ensure current record held<br>Third party to conduct random driving licence checks and report to fleet manager<br>Drivers to be aware of current highway code standards | | | |
| Engine Idling – Air Pollution | Environment | 2 | 3 | M | Drivers to isolate engine, engage handbrake and remove keys when vehicle not travelling, or PTO engaged.<br>Work requiring PTO to be completed in a safe and timely manner.<br>Vehicles not to idle more than 15 minutes<br>Vehicles remotely monitored by Fleet Manager for unnecessary Idling<br>Vehicles to be fitted with LED beacons to allow engine to be switched off | 2 | 1 | L |
| Unauthorised Access – Theft of vehicle or items from vehicle | Environment | 2 | 3 | M | Drivers must always remove the keys from the vehicle when it has been parked.<br>Lock doors and keep windows up when vehicle not attended.<br>Place tools and equipment in locked storage boxes when not in use.<br>Do not leave valuables on show within the vehicle.<br>Vehicles to be fitted with theft alarms, central locking, engine immobilizers and anti-tamper devices.<br>All vehicles to be fitted with tracker devices. | 2 | 1 | L |
| Slip and Falls from height when Entering / Exiting vehicle – General Driving | VRUs<br>Driver<br>Other Road Users | 2 | 3 | M | Only enter or exit a vehicle that has been parked, engine isolated and handbrake engaged.<br>Operatives must maintain three points of contact at all times when entering/existing the vehicle<br>Ensure all steps, handles and footplates are kept clean and damage free<br>Complete daily pre-use checks before use and raise defects with supervisor and fleet manager<br>Never jump out of the vehicle<br>Be aware of hazards on the ground when exiting the vehicle<br>Ensure you do not open doors into live traffic<br>Drivers and passengers must wear hi-vis vests and trousers at all times | 2 | 1 | L |
| Collision when Parking Vehicle – General Driving | VRUs<br>Driver | 3 | 3 | H | Reverse park where practicable<br>Always check area before parking | 3 | 1 | L |

# Fleet Operator Risk Assessments

| Hazards | Persons in Danger | Risk Rating | | | Control measures | Risk Rating | | |
|---|---|---|---|---|---|---|---|---|
| | | S | L | R | | S | L | R |
| | Other Road Users<br>Pedestrians | | | | Once parked, isolate engine, engage handbrake and remove key from ignition<br>When parking downhill, position wheels into kerb<br>When parking uphill. Position wheels away from kerb<br>Whilst parked ensure you are not blocking footpaths, carriageway. Lines of sight or road signs.<br>When parking, be vigilant of pedestrians walking between vehicles | | | |
| Collision when Reversing Vehicle – General Driving | VRUs<br>Driver<br>Other Road Users<br>Pedestrians<br>Workforce | 3 | 3 | H | Always reverse under the assistance of a trained and competent banksman or vehicle marshal<br>Check blind spot and ensure area is clear of pedestrians and obstructions before reversing<br>Ensure vision aids are fully working before reversing<br>Ensure reversing alarms are operational when reversing<br>Drivers must walk route before reversing in they are relying on indirect vision aids | 3 | 1 | L |
| Collision when Maneuvering vehicles in restricted areas – General Driving | VRUs<br>Driver<br>Other Road Users<br>Pedestrians<br>Workforce | 3 | 3 | H | Observe established one way systems<br>Avoids pedestrian routes<br>Move under direction from designated banks man or vehicle marshal<br>Keep speed to a minimum when maneuvering<br>Driver and passengers to always use fitted seat belts | 3 | 1 | L |
| Collision when entering traffic management (TM) – General Driving | VRUs<br>Driver<br>Other Road Users<br>Pedestrians<br>Workforce | 3 | 2 | M | Vehicle not to enter traffic management in convoy, stagger vehicle access times into TM.<br>Vehicles must be fully compliant with chapter 8 marking requirements<br>At 200 yards driver to switch on double amber flashing beacons<br>At 100 yards driver to activate signal indicator into TM<br>At 50 yards driver to start to slow down and enter demarked work entrance<br>Within traffic management driver may stop only after 50 yards after entrance<br>If not safe to enter TM or vehicles are parked within the entrance, abort entry and re-attempt entry<br>Within traffic management keep vehicle speed to 10 mph or 5 mph passing workforce<br>Above procedure is superseded by client requirements briefed at site induction<br>Driver and passengers to always use fitted seat belts | 3 | 1 | L |
| Collision when exiting traffic management (TM) – General Driving | VRUs<br>Driver<br>Other Road Users | 3 | 2 | M | Vehicles must be fully compliant with chapter 8 marking requirements<br>At 50 yards from the exit, drivers to stop and monitor traffic<br>After suitable gap identified, driver to signal rejoining the carriageway and accelerate<br>Abort exiting if unsafe to do so and reverse to 50 yards to start again<br>Once rejoined main traffic, switch off amber beacons and indictor and observe speed limits | 3 | 1 | L |

# Fleet Operator Risk Assessments

| Hazards | Persons in Danger | Risk Rating | | | Control measures | Risk Rating | | |
|---|---|---|---|---|---|---|---|---|
| | | S | L | R | | S | L | R |
| | | | | | Above procedure is superseded by client requirements briefed at site induction<br>Driver and passengers to always use fitted seat belts | | | |
| Explosion when Refueling by Contact with fuel and vapors – General Driving | Driver<br>Workforce<br>Environment | 3 | 2 | M | Do not smoke or complete hot works around fuel<br>COSHH assessment to be briefed to all operatives refueling<br>Vehicles to contain spill kits and operatives trained in their safe use and disposal<br>Operatives to use chemically resistant gauntlets and goggles when refueling<br>Refueling to be completed in designated refueling zones only<br>Do not allow spilled fuel to enter drains or water courses<br>Operatives must wash hands after handling fuel | 2 | 1 | L |
| Explosion from poor Storage of flammable liquids less than 20 liters – General Driving | Driver<br>Workforce<br>Environment | 2 | 3 | M | Only store fuel in UN approved 5 liters or 20 liters metal containers<br>All fuel containers to display flammable liquid class 3 sticker<br>Do not smoke or complete hot works around storage containers<br>COSHH assessment to be briefed to all operatives storing fuel<br>Vehicles to carry an in date dry powder fire extinguishers<br>Vehicles to contain spill kits and operatives trained in their safe use and disposal | 2 | 1 | L |
| Ignoring Restricted Traffic Routes – General Driving | VRUs<br>Driver<br>Other Road Users<br>Pedestrians | 3 | 3 | H | Restricted traffic routes are detailed in contract specific requirements<br>Restricted traffic routes to be communicated to drivers at site induction<br>Vehicles will be monitored to ensure they do not driver on restricted traffic routes<br>Clients will be immediately informed where vehicle has accessed a restricted route | 2 | 1 | L |
| Driver Fatigue– General Driving | VRUs<br>Driver<br>Other Road Users<br>Pedestrians<br>Workforce | 3 | 3 | H | Drivers must insert their digicard or analogue disc in to vehicle at start of shift<br>Drivers must record a break of at least 45 mounts for 4.5 hours of continual driving<br>Drivers must record a 15 minute driving break in every 6 hours of work<br>Drivers must receive a minimum of 12 hours rest between driving shifts<br>Drivers to receive training on correct use of digicards and analogue discs<br>Driver infringements monitored and followed up by the fleet manager | 3 | 1 | L |
| Distractions causing dangerous driving – General Driving | VRUs<br>Driver<br>Other Road Users<br>Pedestrians<br>Workforce | 3 | 3 | H | Drivers are prohibited from doing the following whilst driving:<br>• Using, operating a mobile phone through touch<br>• Manually activating or operating any in-vehicle technology whilst driving<br>• Smoking, eating or drinking whilst driving<br>• Dressing, undressing or grooming whilst driving | 3 | 1 | L |

# Fleet Operator Risk Assessments

| Hazards | Persons in Danger | Risk Rating | | | Control measures | Risk Rating | | |
|---|---|---|---|---|---|---|---|---|
| | | S | L | R | | S | L | R |
| | | | | | • Operating media devices<br>• Talking to passengers<br>• Map reading<br>• Manually wipe the windscreen whilst driving | | | |
| Vehicle fires – General Driving | VRUs<br>Driver<br>Other Road Users<br>Pedestrians<br>Workforce<br>Environment | 3 | 3 | H | Monitor engine temperature to avoid over heating<br>Complete daily pre-use vehicle checks to ensure coolant and electrical systems are fault free<br>Vehicle fire extinguishers to be in date and in prominent location in vehicle and checked daily<br>If vehicle over heats, pull over in a safe place and report to fleet manager<br>In the event of a smoke / fire pull over where safe and exit vehicle<br>Only tackle fire if safe to do so<br>Call emergency services where required<br>Ensure all people are kept away from vehicle | 2 | 1 | L |
| Conduct of Passengers – General Driving | VRUs<br>Driver<br>Passengers<br>Other Road Users<br>Pedestrians | 3 | 2 | M | Passengers must wear the seat belts provided<br>Passengers must only be carried where a seat is provided<br>During travel, control of passengers is the drivers responsibility<br>Animals are not allowed in to be transported within company vehicles<br>Passengers must not distract the driver whilst driving | 3 | 1 | L |
| Mobile Phones causing dangerous driving – General Driving | VRUs<br>Driver<br>Other Road Users<br>Pedestrians<br>Workforce | 3 | 3 | H | Mobile phones can only be used in designated safe zones or when vehicles are parked, isolated and handbrake engaged.<br>During travel, mobile phones must be placed out of reach and on silent<br>If you are calling a driver and they do not answer, do not keep calling and assume they are driving<br>Where possible, text the driver and what for a response | 3 | 1 | L |
| Dangerous driving from Hands Free Kits use – General Driving | VRUs<br>Driver<br>Other Road Users<br>Pedestrians<br>Workforce | 3 | 3 | H | Only company issued handsfree kits to be used<br>Handsfree kits must be voice activated only<br>Operative to receive training in the correct use and maintenance of issued handsfree kit<br>Operative to set up handsfree kit before driving<br>Handsfree kit issued in exceptional circumstances – no phone use preferred | 3 | 1 | L |
| Dangerous driving from other distractions – General Driving | VRUs<br>Driver<br>Other Road Users<br>Pedestrians | 3 | 3 | H | Do not manually operate any electronic device whilst driving<br>Do not eat or drink whilst driving<br>Do not map read, groom or dress whilst driving<br>No driver or passenger to smoke in any company vehicle | 3 | 1 | L |

# Fleet Operator Risk Assessments

| Hazards | Persons in Danger | Risk Rating | | | Control measures | Risk Rating | | |
|---|---|---|---|---|---|---|---|---|
| | | S | L | R | | S | L | R |
| Drugs and Alcohol – General Driving | VRUs<br>Driver<br>Other Road Users<br>Pedestrians<br>Workforce | 3 | 3 | H | Do not come to work under the influence of alcohol or drugs<br>Where medication is taken, inform your supervisor and bring copy of side effects to work<br>If you suspect an employee of being under the influence of alcohol or drugs, inform your supervisor immediately.<br>Supervisors and fleet manger to hold testing kits for presence of drugs or alcohol<br>Where alcohol or drugs are identified, operatives will be sent home, prevented from driving vehicles, and upper management will be informed.<br>Drivers will be sent to third party facilities to undergo official tests for drugs and alcohol. | 3 | 2 | L |
| Safe Driving Standards – General Driving | VRUs<br>Driver<br>Other Road Users<br>Pedestrians | 3 | 3 | H | Drivers to drive in accordance with the Road Traffic Act<br>Driver to drive in accordance with the Highway Code<br>Copies of the highway code to be issued to all vehicles<br>Drivers to ensure that they have submitted a copy of current driving licence to the office<br>Driver and passengers to always use fitted seat belts | 3 | 1 | L |
| Speed Limits – General Driving | VRUs<br>Driver<br>Other Road Users<br>Pedestrians | 3 | 3 | H | Driver and passengers to always use fitted seat belts<br>Drivers to be familiar with highway code<br>Drive in accordance with designated speed limits<br>Streetlights and no signs indicate a speed limit of 30 mph<br>Always drive with 100% concentration on the road<br>Always slow down when approaching junctions, roundabouts and traffic lights<br>Choose correct gear to maintain the right speed for the road<br>Avoid tailgaters, let them pass and do not react<br>Plan journeys in advance and leave with plenty of time<br>Set good examples to other drivers and adhere to the speed limits<br>Employees caught speeding will attend speed awareness training<br>All vehicles are trackered to monitor driving speeds<br>Set speed limiter where provided | 3 | 1 | L |
| Bridge Strikes – Lorry Loader | Driver<br>Other Road Users<br>Workforce | 3 | 3 | H | Drivers to check daily that the vehicles Height Indicator is set to the correct height in cab<br>Before travelling, driver to check height of loads and plant carried on vehicle bed<br>When driving, driver must observe maximum vehicle height signs on approach to structures<br>Supervisors to check that vehicle routes avoid low structures<br>Drivers to be informed of low structures on route to site<br>Drivers to be issued truckers road atlas to allow quick identification of road restrictions<br>In the event of bridge strike:<br>1 – Call number on plaque on the bridge, giving the bridge reference number and location<br>2 – Report the bridge strike to the Police by dialing 999<br>3 – Report the bridge strike to the fleet manager<br>4 – Keep the public away and do not move the vehicle | 3 | 1 | L |
| Mechanical Failure – At start of shift – General Driving | Driver | 2 | 2 | M | Drivers to complete pre-use daily checks<br>Routine maintenance conducted in line with legal and manufacturers guidance<br>Faults found must be reported to fleet manager and site supervisor | 1 | 1 | L |

# Fleet Operator Risk Assessments

| Hazards | Persons in Danger | Risk Rating | | | Control measures | Risk Rating | | |
|---|---|---|---|---|---|---|---|---|
| | | S | L | R | | S | L | R |
| | | | | | Where fleet managers confirms vehicle is “unroadworthy”, vehicle to be prevented from further use and repair arranged by fleet manager, replacement arranged by supervisor.<br>Vehicles prevented from further use must display a sign in drivers window and have their keys stored in a locked container.<br>Faults that are recorded but vehicle still roadworthy, operative to continue to log fault in defect book until fault rectified by routine maintenance | | | |
| Mechanical Failure – On route to site – General Driving | VRUs<br>Driver<br>Passengers<br>Other Road Users<br>Pedestrians<br>Workforce | 3 | 2 | M | Routine maintenance conducted in line with legal and manufacturers guidance<br>When safe to do so pull off road and in to protected area.<br>Do not put yourself or others in danger<br>Contact garage manager to inform them of fault and recovery<br>Contact site supervisor to inform them of delay<br>For recovery out of hours, drivers to contact Paul Amies on 07968 421 905 | 3 | 1 | L |
| Tyre failure – Blowouts and punctures – General Driving | VRUs<br>Driver<br>Passengers<br>Other Road Users<br>Pedestrians<br>Workforce | 3 | 2 | M | Drivers to complete pre-use daily check on tyres<br>Tyre tread depth of 1.6mm minimum for vehicles below 3.5T<br>Tyre tread depth of 1mm minimum for vehicles above 3.5T<br>Where minimum is not achieved park vehicle in a safe place and contact fleet manager<br>Visually check tyre pressure, where required use tyre pressure gauge to confirm pressure<br>Where required, inflate tyre to manufactures specification for model and current load carried<br>Never over inflate tyres<br>Do not attempt to change the tyre at the roadside, contact the fleet manager to arrange for tyre replacement | 3 | 1 | L |
| Driving in adverse weather – Fog – General Driving | VRUs<br>Driver<br>Passengers<br>Other Road Users<br>Pedestrians<br>Workforce | 3 | 3 | H | Driver and passengers to always use fitted seat belts<br>Drive to the current Highway Code<br>Concentrate on the road ahead<br>Be extra vigilant for vulnerable road users<br>Never drive beyond the limits of visibility<br>Slow down to a safe manageable speed to fit the road and traffic conditions<br>Keep a safe distance from the vehicle in front<br>Switch on the vehicles low beam headlights<br>If visibility is less than 100 yards use front and rear fog lights where fitted<br>When traveling on the motorway, keep to the left hand lane<br>Watch your speedometer, fog can cause a “slow-motion” effect of passing vehicles<br>Use your wipers, screen wash and demister to keep visibility at maximum<br>Switch off your radio and listen for traffic that you cannot see<br>Watch out for parked cars and other in road obstructions<br>In an emergency, do not stop on the carriageway<br>If the fog is too dense to continue driving, pull of the road completely, position vehicle in a protected area away from traffic and inform your supervisor.<br>Take regular breaks to avoid eye strain and keep stress levels down. | 3 | 1 | L |

# Fleet Operator Risk Assessments

| Hazards | Persons in Danger | Risk Rating | | | Control measures | Risk Rating | | |
|---|---|---|---|---|---|---|---|---|
| | | S | L | R | | S | L | R |
| Driving in adverse weather – Heavy rain – General Driving | VRUs<br>Driver<br>Passengers<br>Other Road Users<br>Pedestrians<br>Workforce | 3 | 3 | H | Driver and passengers to always use fitted seat belts<br>Drive to the current Highway Code<br>Concentrate on the road ahead<br>Be extra vigilant for vulnerable road users<br>Never drive beyond the limits of visibility<br>Slow down to a safe manageable speed to fit the road and traffic conditions<br>Switch on your headlights to be seen at all times<br>Keep a safe distance from the vehicle in front, increase gap as weather worsens<br>Avoid road spray from adjacent vehicles<br>Give ample time to slow down in wet conditions<br>When maneuvering, double check your mirrors for vehicles with no headlights on<br>Avoid heavy breaking, heavy acceleration or abrupt steering on wet roads<br>Never use cruise control in heavy rain | 3 | 1 | L |
| Driving in adverse weather –Floods – General Driving | VRUs<br>Driver<br>Passengers<br>Other Road Users<br>Pedestrians<br>Workforce | 3 | 2 | M | Driver and passengers to always use fitted seat belts<br>Drive to the current Highway Code<br>Never drive through running flood water – find another route or wait for it to clear<br>Do not reverse in flood water as water will be pushed up the exhaust and into the engine<br>Do not drive through flooded roads if you cannot see the other side<br>Do not drive cars or vans through flood water deeper than 30cm (12in)<br>Never use cruise control in flood water<br>Avoid getting swamped by other passing vehicles<br>If you are stranded in rising water, abandon your vehicle off road and head for dry land, call 999<br>Avoid heavy breaking, heavy acceleration or abrupt steering on flooded roads<br>Always test your brakes after going through water<br>Inform your supervisor if you have stopped to wait for it to clear | 2 | 1 | L |
| Driving in adverse weather – Snow and Ice – General Driving | VRUs<br>Driver<br>Passengers<br>Other Road Users<br>Pedestrians<br>Workforce | 3 | 3 | H | Driver and passengers to always use fitted seat belts<br>Drive to the current Highway Code<br>Clear snow of roofs, windows bonnets and lights – it is an offence that carries a fine and 3 points<br>Complete daily pre-use checks<br>Be extra vigilant for vulnerable road users<br>Slow down to a safe manageable speed to fit the road and traffic conditions<br>When heavy snow is falling, turn low beam headlights on to be seen and avoid being dazzled<br>Watch your speedometer, falling snow can close a “slow-motion” effect of passing vehicles<br>Use your wipers, screen wash and demister to keep visibility at maximum<br>Switch off your radio and listen for traffic that you cannot see<br>Lower your speed to allow you to stop well within the distance you can see clearly<br>It takes 10 times the distance to stop in snow and ice, allow plenty of time and distance to stop safely<br>Use your brakes with caution, they act differently on ice<br>Plan maneuvers in advance to avoid heavy breaking, heavy acceleration or abrupt steering on icy roads<br>Never use cruise control on icy roads or falling snow.<br>Leave enough space to avoid snow spray from vehicles. | 3 | 1 | L |

# Fleet Operator Risk Assessments

| Hazards | Persons in Danger | Risk Rating | | | Control measures | Risk Rating | | |
|---|---|---|---|---|---|---|---|---|
| | | S | L | R | | S | L | R |
| | | | | | Use low gears to keep traction, especially on hills<br>Watch out for Gritters, only pass when it is safe to do so.<br>Watch out for abandoned vehicles.<br>Turn back if conditions are to treacherous and inform your supervisor<br>If the snow is too thick to continue driving, pull of the road completely, position vehicle in a protected area away from traffic and inform your supervisor.<br>Take regular breaks to avoid eye strain and keep stress levels down.<br>If you become stranded, stay in the vehicle and contact the emergency services and the fleet manager.<br>Do not abandon your vehicle in the carriageway, as it will block access for emergency services. | | | |
| Driving in adverse weather – High Winds – General Driving | VRUs<br>Driver<br>Passengers<br>Other Road Users<br>Pedestrians<br>Workforce | 3 | 3 | H | Driver and passengers to always use fitted seat belts<br>Drive to the current Highway Code<br>Company has no at risk high sided vehicles<br>Drivers and supervisors to monitor weather reports<br>Driver to slow down to a safe manageable speed suitable to the road and traffic conditions<br>Drivers to avoid exposed routes and bridges in high winds<br>If the wind becomes too great to continue driving, pull of the road completely, position vehicle in a protected area away from traffic and inform your supervisor. | 2 | 1 | L |
| Cleaning Vehicle – Using Pressure Washer – General Driving | Driver<br>Workforce<br>Environment | 2 | 3 | M | Operative to be trained in the correct use of pressure washer<br>Operative to check pressure washer before use to ensure it is defect free and safe to use.<br>Where defect found, isolate from use and inform supervisor.<br>Deploy barriers to establish a “no-go zone” before using pressure washing<br>Never point nozzle at an operative.<br>Pressure washer to be used by operative wearing water resistant gloves and impact resistant goggles | **2** | **1** | **L** |
| Prolonged contact with engine oil – Causing dermatitis and skin disorders – General Driving | Driver<br>Environment | 1 | 3 | L | Brief operatives on product CoSHH requirements for safe handling, storage and emergency requirements.<br>Operatives must wear Nitrile gloves or other suitable impervious gloves to protect against chemical penetration.<br>Operatives must wear and regularly change / clean oil stained overalls to protect against body contact.<br>Operative to thoroughly clean themselves with hot water and soap to remove and oil on the skin.<br>Maintenance activities restricted to garage staff only – drivers prohibited from making unauthorized repairs<br>Dispose of oil stained clothing and waste oil in accordance with CoSHH requirements | 1 | 1 | L |
| Vehicle collision – General Driving | VRUs<br>Driver | 3 | 3 | H | Driver and passengers to always use fitted seat belts<br>Drive to the current Highway Code | 3 | 1 | L |

# Fleet Operator Risk Assessments

| Hazards | Persons in Danger | Risk Rating | | | Control measures | Risk Rating | | |
|---|---|---|---|---|---|---|---|---|
| | | S | L | R | | S | L | R |
| | Passengers<br>Other Road Users<br>Pedestrians<br>Workforce | | | | Drivers to hold relevant and up to date vehicle licence<br>Drivers to be assessed as competent to drive by fleet manager<br>Driver to complete daily pre-start vehicle inspection<br>Slow down to a safe manageable speed to fit the road and traffic conditions<br>Keep a safe distance from the vehicle in front | | | |
| Awaiting Roadside repairs or recovery – Being struck by passing vehicles – General Driving | VRUs<br>Driver<br>Passengers<br>Other Road Users<br>Pedestrians<br>Workforce | 3 | 3 | H | Where safe to do so, park, Isolate engine and engage handbrake<br>Position wheels to kerb side and activate hazards<br>Ensure driver and all passengers exit vehicle and stand away in a safe place, preferably behind safety barrier<br>Ensure you are wearing PPE<br>Warn others involved in incident of road side hazards, never put yourself in danger<br>Warn oncoming traffic of dangers where required<br>In event of incident record details in “Bump pack” provided<br>Vehicles equipped with first aid kits and fire extinguishers | 3 | 2 | M |
| Road Rage – General Driving | Driver<br>Passengers | 2 | 2 | M | Driver and passengers to always use fitted seat belts<br>Drive to the current Highway Code<br>Drive considerately and observe the highway code<br>Do not confront individuals that have stopped<br>Behave respectfully and do not raise your voice<br>Report incident to your supervisor using observation cards<br>Contact the police where member of the public displays violent conduct | 1 | 1 | L |
| Overloaded Vehicles – General Driving | VRUs<br>Driver<br>Passengers<br>Other Road Users<br>Pedestrians<br>Workforce | 2 | 3 | M | Driver to be aware of weight of load to be carried<br>Vehicle to clearly display plated weight, unladen weight and axel weights<br>Vehicles must not be loaded over their plated weight<br>Unknown loads to be taken to weighbridge for checking | 2 | 1 | L |
| Unbalanced Vehicles – General Driving | VRUs<br>Driver<br>Passengers<br>Other Road Users | 2 | 3 | M | Driver to be aware of weight of load to be carried<br>Vehicle to clearly display plated weight, unladen weight and axel weights<br>Vehicles must not be loaded over their plated weight<br>Unknown loads to be taken to weighbridge for checking | 2 | 1 | L |

# Fleet Operator Risk Assessments

| Hazards | Persons in Danger | Risk Rating | | | Control measures | Risk Rating | | |
|---|---|---|---|---|---|---|---|---|
| | | S | L | R | | S | L | R |
| | Pedestrians<br>Workforce | | | | Loads to be placed evenly over axels<br>Loads to be placed evenly along vehicle bed<br>Tyre pressures to be checked before start of shift<br>Loads to be secured for transit using suitable chocks and straps<br>Remaining loads may require to be repositioned on lorry bed to rebalance vehicle | | | |
| Loading – Manual Handling objects less than 25 kg – General Driving | Driver<br>Workforce | 2 | 2 | M | Training course on correct Manual Handling techniques.<br>Comply with Manual Handling Regulations and follow the guidelines.<br>Where possible mechanise lifting operations.<br>Keep twisting, stretching and repetitive movements to a minimum.<br>Always test the load before attempting to lift it.<br>Seek assistance if required.<br>When storing items, keep heavier items on the ground, avoid storing items heavier than 25kg above your waste and avoid storing items above 10kgs above your head.<br>Operatives handling items heavier than 20kgs must complete a Manual Handling Assessment checklist. | 2 | 1 | L |
| Transporting 6m Ducts – Lorry bed greater than 6m – Lorry Loader | Driver<br>Workforce | 2 | 2 | M | Unless coiled, 6m ducts to only be transported flat on the bed of a lorry<br>Where possible, canches of ducts must be pre-slung<br>Lorry bed access required for operatives – ensure edge protection is deployed<br>6m long ducts/pipes secured for travel in manufacturers canches<br>Canches to be stacked no more than two high on the lorry bed<br>Canches to be secured by ratchet strap at least 1m from each end<br>To avoid transportation of single ducts, canches to be delivered directly on site.<br>Canches to be loaded/unloaded in accordance with approved lift plan.<br>Singles ducts must be laid flat on lorry bed and secured by ratchet strap at least 1m from each end.<br>Single ducts can be manually handled | 2 | 1 | L |
| Transporting palletized loads on lorry bed – Lorry Loader | Driver<br>Workforce | 2 | 2 | M | Pallets to be loaded in accordance with approved lift plan<br>Where lorry bed access required for operatives – ensure edge protection is deployed<br>Pallets to be stacked no more than one high on the lorry bed<br>Only undamaged pallets to be used for transporting loads<br>Pallets must not be lifted with the load as they are not SWL rated<br>Check that all loads on pallets are secured and no partial/unsecured loads are on the pallet<br>Where lorry bed does not have lockable side restraints, pallets to be secured by placing two ratchet straps over each pallet<br>End pallets to be secured from lateral movement by securing end restraints or securing ratchet | 2 | 1 | L |

# Fleet Operator Risk Assessments

| Hazards | Persons in Danger | Risk Rating | | | Control measures | Risk Rating | | |
|---|---|---|---|---|---|---|---|---|
| | | S | L | R | | S | L | R |
| | | | | | straps at either end<br>Palletized load to be unloaded in accordance with approved lift plan. | | | |
| Transporting Columns and sign posts up to 15m long – Projecting loads less than 2m – Lorry Loader | VRUs<br>Driver<br>Passengers<br>Other Road Users<br>Pedestrians<br>Workforce | 3 | 2 | M | Columns and posts to be transported on polling wagons or lorry beds.<br>Where possible, columns to be pre-slung with lifting accessories<br>Where lorry bed access required for operatives – ensure edge protection is deployed<br>Secure columns and posts with two sets of ratchet straps at least 1m from each end of post/column or lorry bed<br>Demark end of projecting load so it is clear to traffic at the rear of the vehicle<br>Forward projecting loads less than 2.0m have no extra requirements<br>Loads that project front or back greater than 2.0m must have their additional equipments confirmed by the fleet manager<br>Columns to be unloaded in accordance with approved lift plan.<br>Unloaded columns to be placed on skids to prevent contact from the ground or adjacent columns.<br>Columns must be braced against the side of the H-bars or rack<br>Straps must be passed under, over and back round columns being carried, and secured to opposite edge<br>Columns must not be stacked above the height of the H-bar vertical retainers<br>Check vehicle traveling height when loaded and adjust vehicle height tracker | 3 | 1 | L |
| Delivering bricks, pavers, blocks and kerbs - Lorry Loader with brick grab attachment | VRUs<br>Driver<br>Passengers<br>Other Road Users<br>Pedestrians<br>Workforce | 3 | 3 | H | Brick grab to be used in accordance with approved lift plan and RAMS<br>Only trained and competent operator to use brick grab<br>Only use brick grab attachment after receiving familiarization training to use it<br>Operate and maintain brick grab in accordance with manufactures guidance<br>Brick Grab O&M Manual must be present with the lorry loader<br>Brick Grab to have a valid 6 month LOLER certificate<br>Inspect the brick grab before use to confirm it is safe to use<br>Only lift square, rectangular loads that fit in the open width of the brick grab<br>Do not lift off-center loads<br>Safety Catchment net must be fitted around brick grab to prevent loose loads from falling<br>Never put any part of body under the brick grab<br>Never slew brick grab over people<br>Detach brick grab from crane hook and secure for transportation before stowing crane | 3 | 1 | L |

# Fleet Operator Risk Assessments

| Hazards | Persons in Danger | Risk Rating | | | Control measures | Risk Rating | | |
|---|---|---|---|---|---|---|---|---|
| | | S | L | R | | S | L | R |
| Shed Loads – General Driving | VRUs<br>Driver<br>Passengers<br>Other Road Users<br>Pedestrians<br>Workforce | 3 | 3 | H | Stop immediately where safe to do so<br>Keep yourself safe<br>Warning other traffic of the hazard in the road<br>Call the emergency services to assist in safe removal from the carriageway<br>Inform the fleet manager immediately | 3 | 1 | L |
| Transporting concrete – General Driving | Driver<br>Workforce<br>Environment | 2 | 3 | M | Concrete to be transported in grab wagons only<br>Concrete to be placed in bed of grab wagon<br>1m3 cube of concrete weighs 2.4T - Tippers must not be used to transport concrete more than 0.25m3, a quarter of a cube of concrete<br>Wash out after transporting concrete at designated locations only | 2 | 1 | L |
| Grab Wagons – Lorry Loader | VRUs<br>Driver<br>Passengers<br>Other Road Users<br>Pedestrians<br>Workforce | 2 | 2 | M | Ensure the grab is stowed for transit<br>Operator to evenly distribute load within wagon<br>Grab wagon to be used in accordance with approved lift plan and RAMS<br>Only trained and competent operator to use grab wagon<br>Operate and maintain grab wagon in accordance with manufactures guidance<br>Grab wagon O&M Manual must be present with the lorry loader<br>Grab wagon to have a valid 12 month LOLER certificate<br>Inspect the grab wagon before use to confirm it is safe to use<br>Only lift loads when clamshell is fully closed<br>Never slew boom over people | 2 | 1 | L |
| Transporting plant – Lorry Loader | VRUs<br>Driver<br>Passengers<br>Other Road Users<br>Pedestrians<br>Workforce | 3 | 2 | M | Check weight of plant is suitable for transportation with beavertail<br>Check height of plant on lorry bed and reset vehicle height indicator where necessary<br>Plant to be loaded / offloaded on to beavertail using the hydraulic ramp at the rear of the vehicle<br>Plant to be positioned on lorry bed by competent and trained operatives<br>All plant to be parked, engine isolated and brake engaged<br>All plant to have doors, windows, booms and cranes secured for transportation<br>Ensure all extra attachments are individually secured to lorry bed, ready for transit<br>Plant to be secured for transit in accordance with manufacturers instructions<br>Deploy chocks or blocks as specified in the manufacturers instructions<br>Fix plant using chains, tighten with binders and safely tie the chain binders levers to prevent loosening during transit. | 3 | 1 | L |

# Fleet Operator Risk Assessments

| Hazards | Persons in Danger | Risk Rating | | | Control measures | Risk Rating | | |
|---|---|---|---|---|---|---|---|---|
| | | S | L | R | | S | L | R |
| Transporting plant – Plant Trailer – General Driving | VRUs<br>Driver<br>Passengers<br>Other Road Users<br>Pedestrians<br>Workforce | 3 | 2 | M | Trailer to be towed only with operative holding B+E licence category<br>Check weight of plant is suitable for being towed with vehicle and placed on trailer<br>Driver to complete trailer pre-use daily plant inspection sheet before use<br>All plant to be parked, engine isolated and brake engaged<br>All plant to have doors, windows, booms and cranes secured for transportation<br>Ensure all extra attachments are individually secured for transit<br>Plant to be secured for transit in accordance with manufacturers instructions<br>Deploy chocks or blocks as specified in the manufacturers instructions<br>Fix plant using chains, tighten with binders and safely tie the chain binders levers to prevent loosening during transit. | 3 | 1 | L |
| Towing Trailer - Tower Lights, Cable Trailer, generators – General Driving | VRUs<br>Driver<br>Passengers<br>Other Road Users<br>Pedestrians<br>Workforce | 3 | 2 | M | Driver to hold a B+E licence for trailer weight above 750 Kg<br>Driver to check trailer weight against their card category<br>Complete trailer pre-use check before using<br>Avoid placing persons in crush zones between vehicle and trailer<br>Driver to check that break away cable secured to vehicle before moving off<br>Driver to ensure that light board and number plate are clearly displayed on the trailer<br>Driver to ensure that trailer handbrake engaged before disengaging vehicle | 3 | 1 | L |
| Transporting Fuel in Bowser – below 1000 liters – General Driving | Driver<br>Workforce<br>Environment | 3 | 3 | H | Drivers of fuel bowsers to receive ADR training<br>Conduct pre-use checks on fuel bowsers<br>2Kg powder fire extinguisher issued and maintained with fuel bowser<br>Large spill kit issued to and maintained with fuel bowser<br>Smoking and hot works prohibited adjacent the fuel bowser<br>Driver to be issued flame retardant hi-vis trousers and vest<br>Driver to be issued chemically resistant gauntlets and goggles for refueling<br>Fuel to be transported in UN approved container<br>Class 3 flammable sticker and Environmental hazard sticker to be clearly displayed<br>COSHH assessment to be briefed to all operatives storing fuel | 3 | 1 | L |
| Work at height -Falls from vehicle bed – General Driving | Driver<br>Workforce | 3 | 3 | H | Install edge protection before accessing vehicle bed<br>Access vehicle bed using insitu steps or ladders<br>Where practicable, plan walking route so you walk away from edge of vehicle bed<br>Complete pre-use daily inspection of vehicle bed before use<br>Ensure vehicle bed is clean before use and free from debris or loose materials | 3 | 1 | L |

# Fleet Operator Risk Assessments

| Hazards | Persons in Danger | Risk Rating | | | Control measures | Risk Rating | | |
|---|---|---|---|---|---|---|---|---|
| | | S | L | R | | S | L | R |
| Transportation of waste – General Driving | Driver<br>Environment | 3 | 3 | H | Vehicle to have copy of in date Waste Carriers Licence<br>All waste transported on vehicle to be documented on a waste transfer note<br>All waste to be taken to an approved Waste Transfer Station or Carrier, Broker or Dealer of waste<br>Tipping of waste at no approved location is prohibited | 1 | 1 | L |
| Driving at night – General Driving | VRUs<br>Driver<br>Passengers<br>Other Road Users<br>Pedestrians<br>Workforce | 3 | 3 | H | Driver and passengers to always use fitted seat belts<br>Drive to the current Highway Code<br>Switch on your headlights on<br>Concentrate on the road ahead<br>Only use full beam when road not illuminated by street lights<br>Turn off full beam when oncoming traffic approaches<br>Be extra vigilant for vulnerable road users<br>Never drive beyond the limits of visibility<br>Slow down to a safe manageable speed to fit the road and traffic conditions<br>Keep a safe distance from the vehicle in front<br>When maneuvering, double check your mirrors for vehicles with no headlights on | 3 | 1 | L |
| Identifying suspicious behavior – Counter terrorism (CT) | VRUs<br>Driver<br>Passengers<br>Other Road Users<br>Pedestrians<br>Workforce | 3 | 2 | M | Appoint Counter Terrorism champion<br>Drivers to complete the FORS eLearning CT module<br>Counter Terrorism champion to issue CT posters and information<br>Ensure mobile phone is kept fully charged<br>Drivers prohibited from giving lifts to members of the public<br>Always request identification when challenged by others<br>Only stop for marked police DVSA vehicles<br>Keep vehicle isolated and doors located when not in use<br>Store keys away from doors and windows when sleeping / away from work<br>Do not stop in areas with Hi-jack hotspot signs<br>Only load/unload in areas authorized by your site supervisor<br>Never load directly into another vehicle<br>Check changes to delivery areas with supervisor<br>Where confronted with potential terrorists, follow instructions RUN – HIDE - TELL<br>Report suspicious activity to:<br>Immediately report theft of high risk items (such as fuel/bleach) to the Police<br>Report emergency terrorism threats to the police - 999<br>Report non-emergency terrorism threats to Anti-terrorism hotline – 0800789321<br>Report non-emergency crime to the police – 101<br>Report Non-emergency HGV crime to the Freight Crime Desk – 02380 478 311 | 3 | 1 | L |
| Dealing with vehicle-borne improvised explosive devices – Counter terrorism (CT) | VRUs<br>Driver<br>Passengers | 3 | 2 | M | Appoint Counter Terrorism champion<br>Drivers to complete the FORS eLearning CT module<br>Counter Terrorism champion to issue CT posters and information<br>Ensure mobile phone is kept fully charged<br>Always request identification when challenged by others | 3 | 1 | L |

# Fleet Operator Risk Assessments

| Hazards | Persons in Danger | Risk Rating | | | Control measures | Risk Rating | | |
|---|---|---|---|---|---|---|---|---|
| | | S | L | R | | S | L | R |
| | Other Road Users<br>Pedestrians<br>Workforce | | | | Only stop for marked police DVSA vehicles<br>Keep vehicle isolated and doors located when not in use<br>Store keys away from doors and windows when sleeping / away from work<br>Do not stop in areas with Hi-jack hotspot signs<br>Keep vehicles and loads in secure works areas and loading areas<br>Vehicles and loads left in none secure areas must be rigorously inspected for stowaways or signs of tampering<br>Use defensive parking to deter thieves<br>Where confronted with potential terrorists, follow instructions RUN – HIDE - TELL<br>Report suspicious activity to:<br>Immediately report theft of high risk items (such as fuel/bleach) to the Police<br>Report emergency terrorism threats to the police - 999<br>Report non-emergency terrorism threats to Anti-terrorism hotline – 0800789321 | | | |
| Dealing with bomb threats and suspect devices – Counter terrorism (CT) | VRUs<br>Driver<br>Passengers<br>Other Road Users<br>Pedestrians<br>Workforce | 3 | 2 | M | Appoint Counter Terrorism champion<br>Drivers to complete the FORS eLearning CT module<br>Counter Terrorism champion to issue CT posters and information<br>Ensure mobile phone is kept fully charged<br>Drivers prohibited from giving lifts to members of the public<br>Always request identification when challenged by others<br>Only stop for marked police DVSA vehicles<br>Keep vehicle isolated and doors located when not in use<br>Store keys away from doors and windows when sleeping / away from work<br>Do not stop in areas with Hi-jack hotspot signs<br>Keep vehicles and loads in secure works areas and loading areas<br>Vehicles and loads left in none secure areas must be rigorously inspected for stowaways or signs of tampering<br>Use defensive parking to deter thieves<br>Only load/unload in areas authorized by your site supervisor<br>Never load directly into another vehicle<br>Check changes to delivery areas with supervisor<br>Where confronted with potential terrorists, follow instructions RUN – HIDE - TELL<br>Report suspicious activity to:<br>Immediately report theft of high risk items (such as fuel/bleach) to the Police<br>Report emergency terrorism threats to the police - 999<br>Report non-emergency terrorism threats to Anti-terrorism hotline – 0800789321<br>Report non-emergency crime to the police – 101<br>Report Non-emergency HGV crime to the Freight Crime Desk – 02380 478 311 | 3 | 1 | L |